Improved Horizontal Clash Analysis Benchmark

General · https://mes100.com/docs/improved-horizontal-clash-analysis-benchmark/

Horizontal Clash Analysis is applied for *node-to-node* and *node-to-pipe* checking. Starting from MiTS 2.4 versions, the computation for the Horizontal Clash Analysis feature has been improved.

For a more realistic sense of the clashes, the material thickness of the utilities is now factored into the clearance solutions. With these, the clashes are now divided into two - ***inner profile clash*** and ***outer profile clash***.

MiTS 2 Project file for reference **here**

MiTS 3 Project file for reference **here**

(**There will be differences in the horizontal clearance obtained due to the **Sump/Manhole Profile** available in MiTS 3. Additionally, changes were made to the network in MiTS 2 to produce the three types of clearance)

"-" clash

Inner Profile Clash

It is a clash between utilities that involves the inner profile. Examples are shown below.

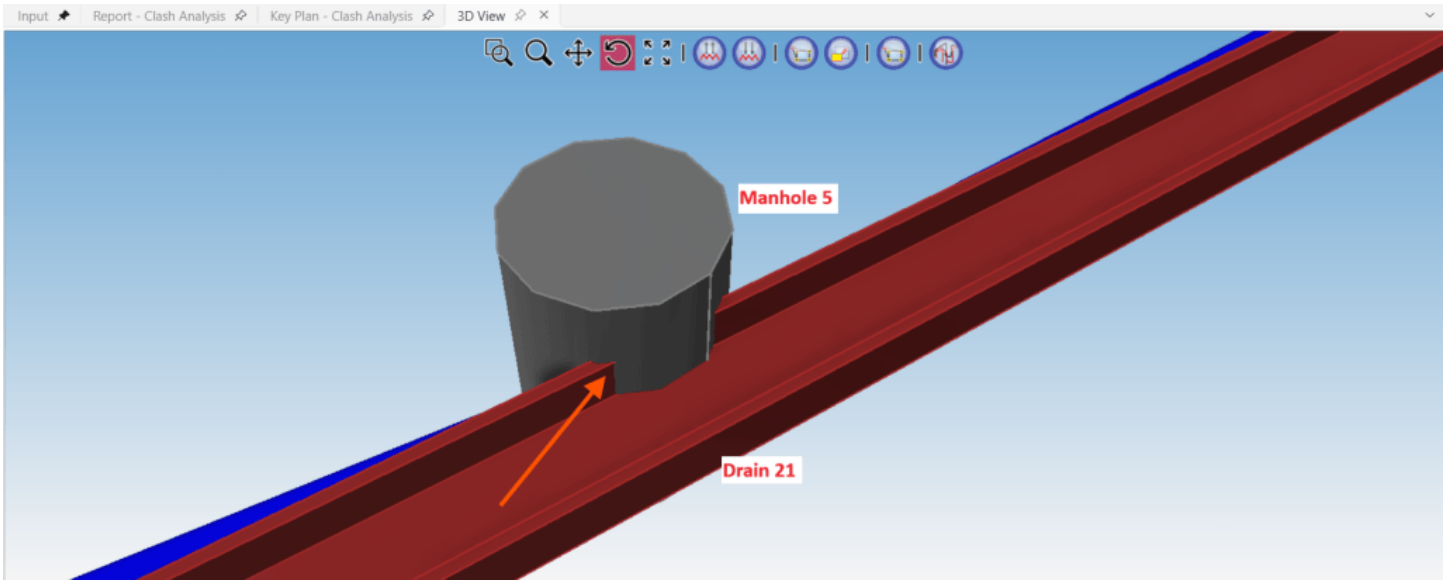

Manhole 5 and Drain 21 are clashing horizontally



The distance of the clash is shown in the Clash Analysis report

Input | Report - Clash Analysis | Key Plan - Clash Analysis | 3D View

Node	Clearance (m)	Clashing Entity	Clash Types	ID	ClashStatus
Manhole 1	0.492	Drain [5]	Insufficient Clearance	3	Warning
Manhole 4	0.311	Drain [9]	Insufficient Clearance	4	Warning
Manhole 5	-0.111	Drain [21]	Clash on Inner Profile	5	Error
Sump 20	0.391	Manhole 7	Insufficient Clearance	1	Warning
Sump 21	0.391	Manhole 6	Insufficient Clearance	2	Warning
Sump 10	-0.160	Sewer [3]	Clash on Outer Profile	6	Error

Drain 21 and Manhole 5 (ID5) are clashing on the inner profile with 0.111m clearance

The value is measured between the maximum distance of the inner profile of the entities that clash. The measurement can be done directly in MiTS software or the ACAD application as in the images below.

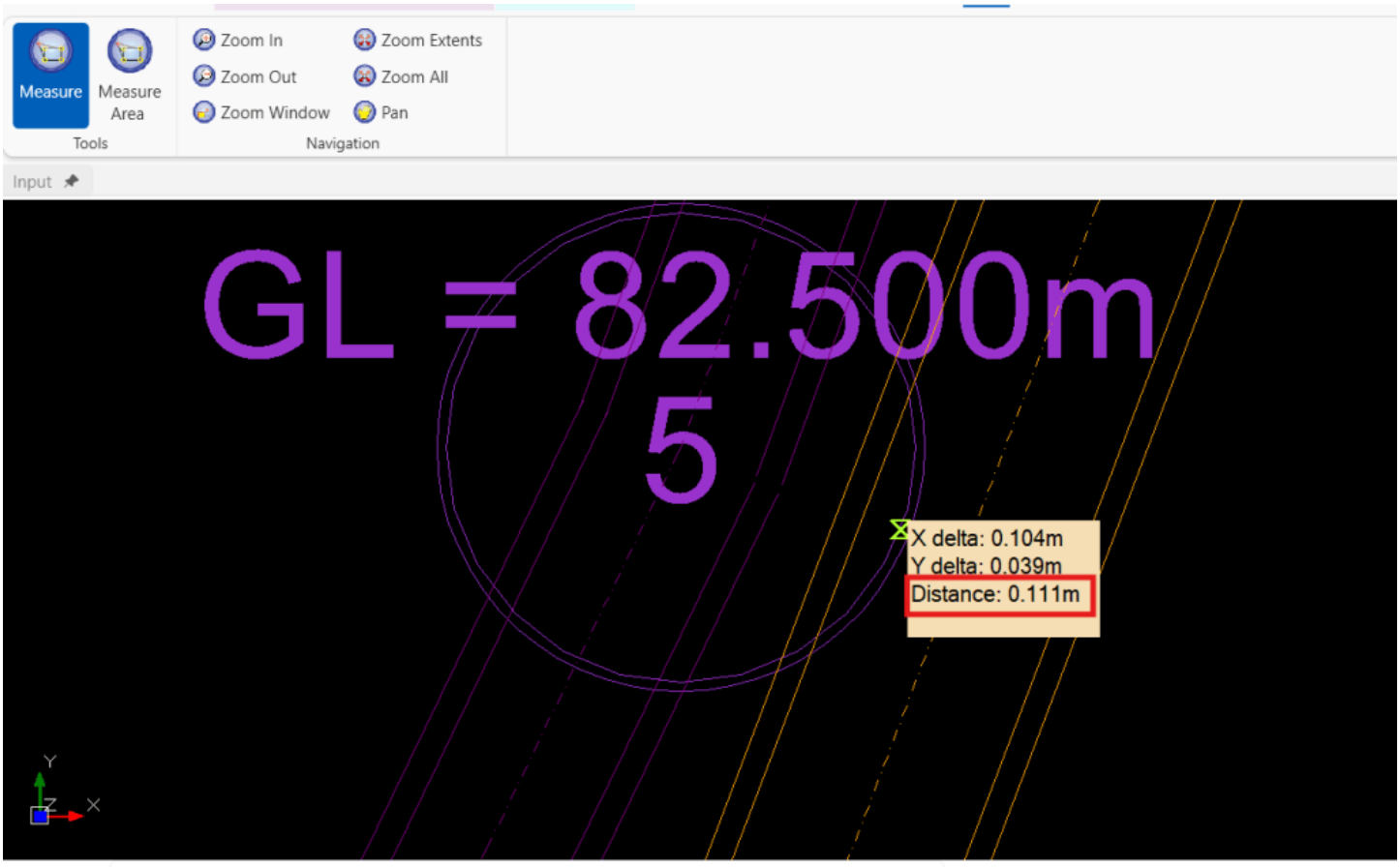

In MiTS

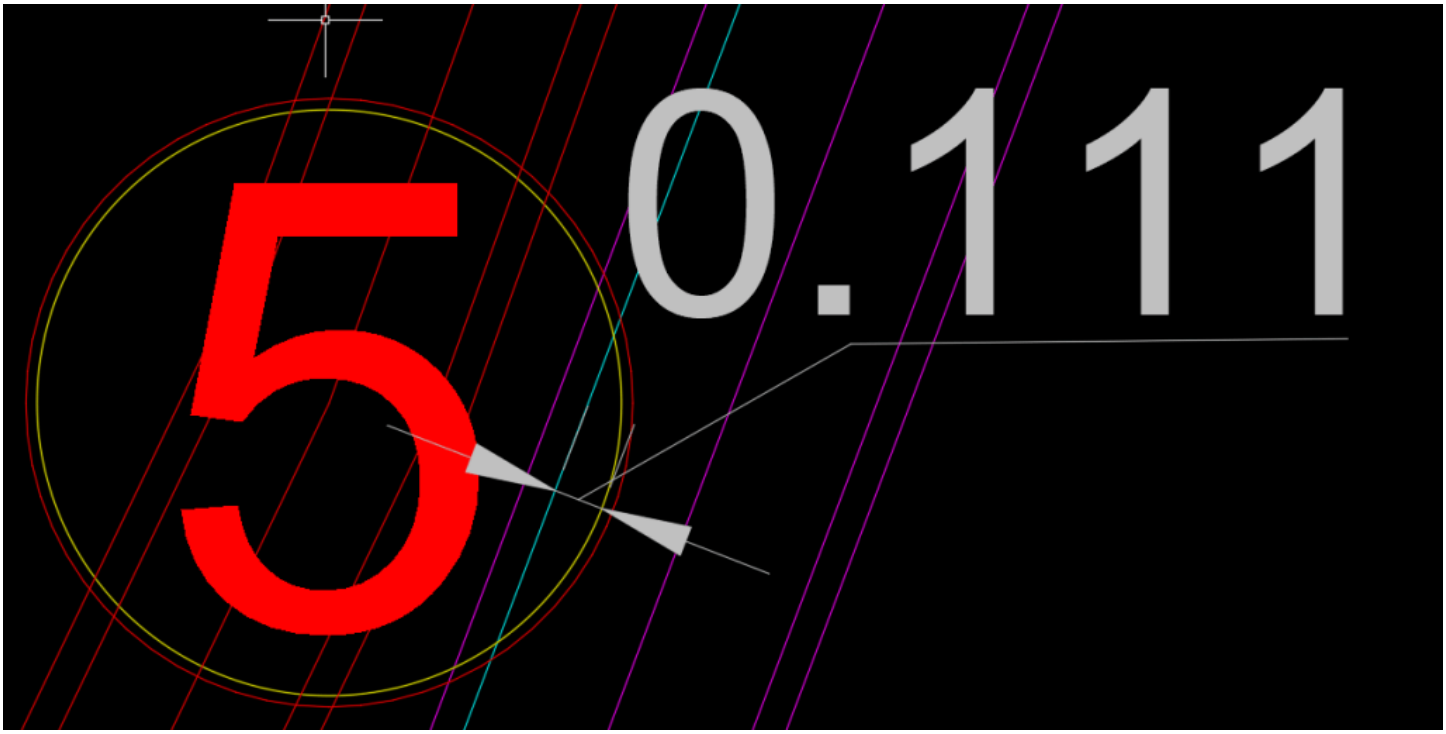

In ACAD: The Yellow Line represents the inner profile of Manhole 5 and Cyan Blue represents the inner profile of Drain 21

Outer Profile Clash

The outer profile clash means that the entities clash only within the thickness and involve only the outer profile of the entities. For example, refer to the images below.

Input | Report - Clash Analysis | Key Plan - Clash Analysis | 3D View

Node	Clearance (m)	Clashing Entity	Clash Types	ID	ClashStatus
Manhole 1	0.492	Drain [5]	Insufficient Clearance	3	Warning
Manhole 4	0.311	Drain [9]	Insufficient Clearance	4	Warning
Manhole 5	-0.111	Drain [21]	Clash on Inner Profile	5	Error
Sump 20	0.391	Manhole 7	Insufficient Clearance	1	Warning
Sump 21	0.391	Manhole 6	Insufficient Clearance	2	Warning
Sump 10	-0.160	Sewer [3]	Clash on Outer Profile	6	Error

Sump 10 and Sewer 3 are clashing on the outer profile with 0.160m clearance

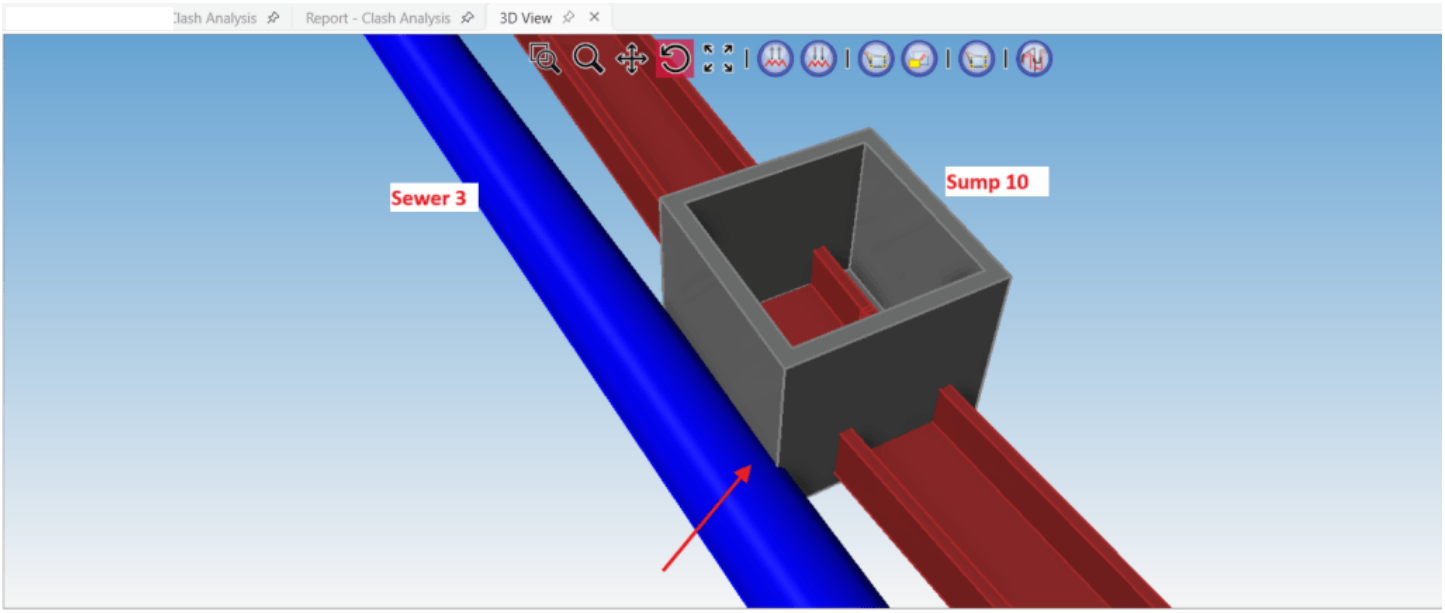

Sump 10 and Sewer 3 are clashing horizontally from 3D View

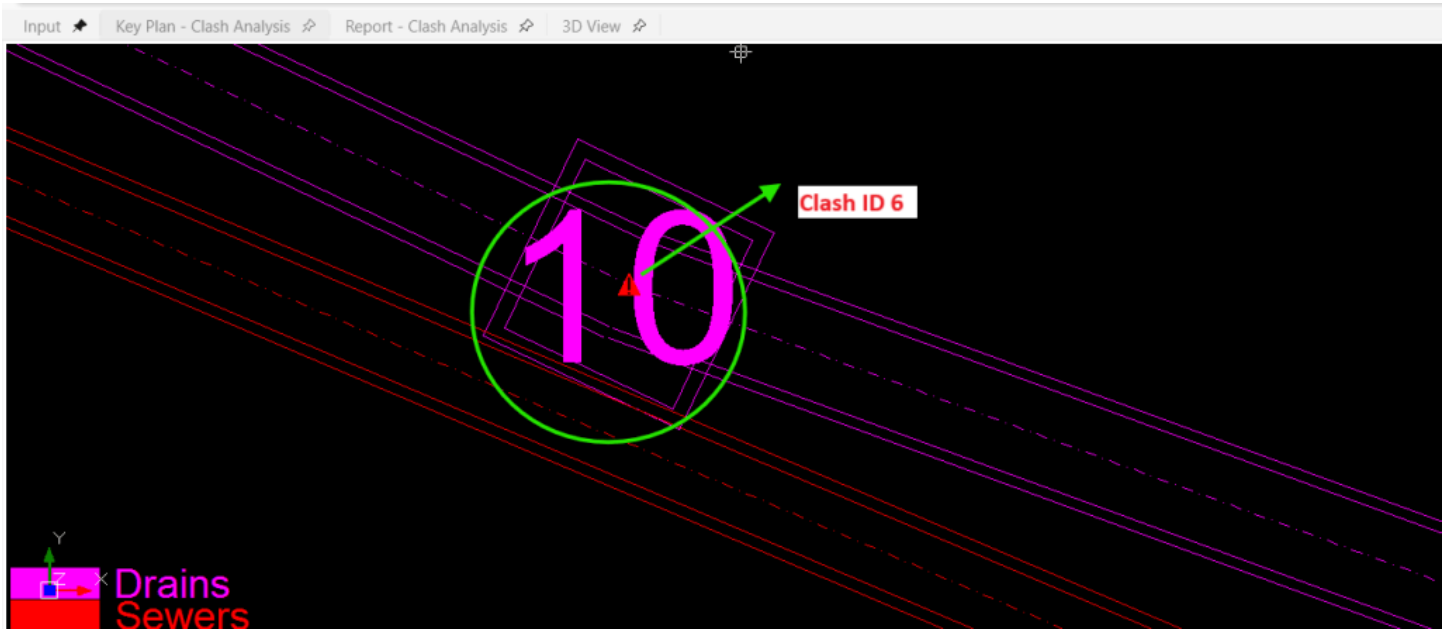

Computation

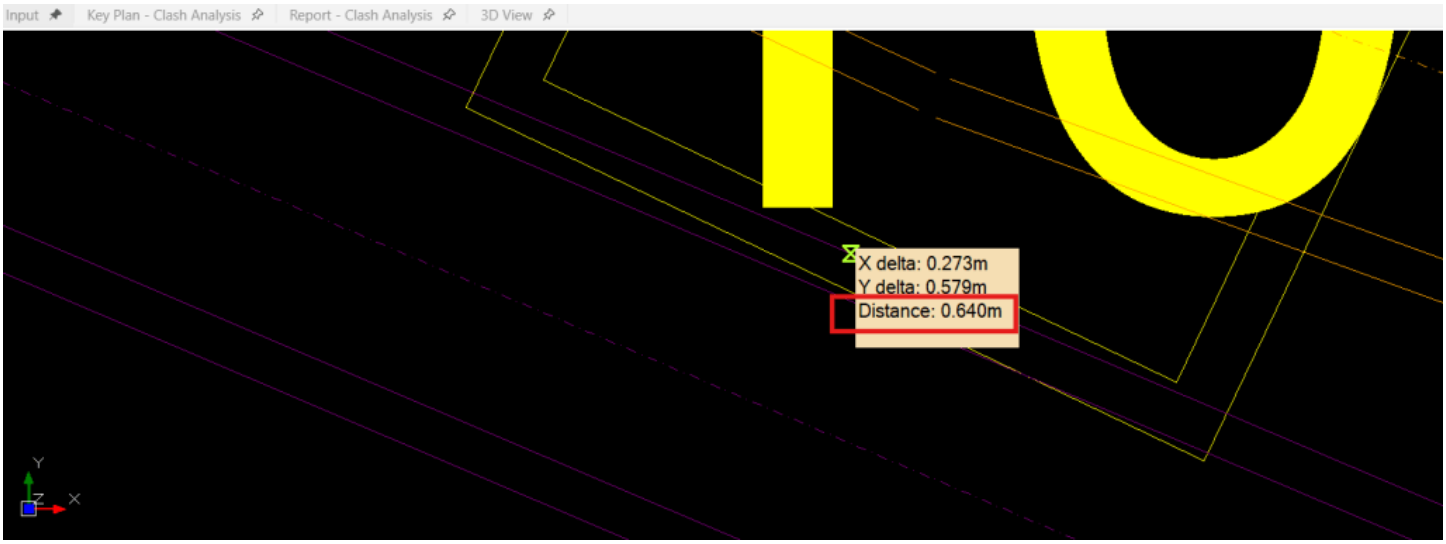

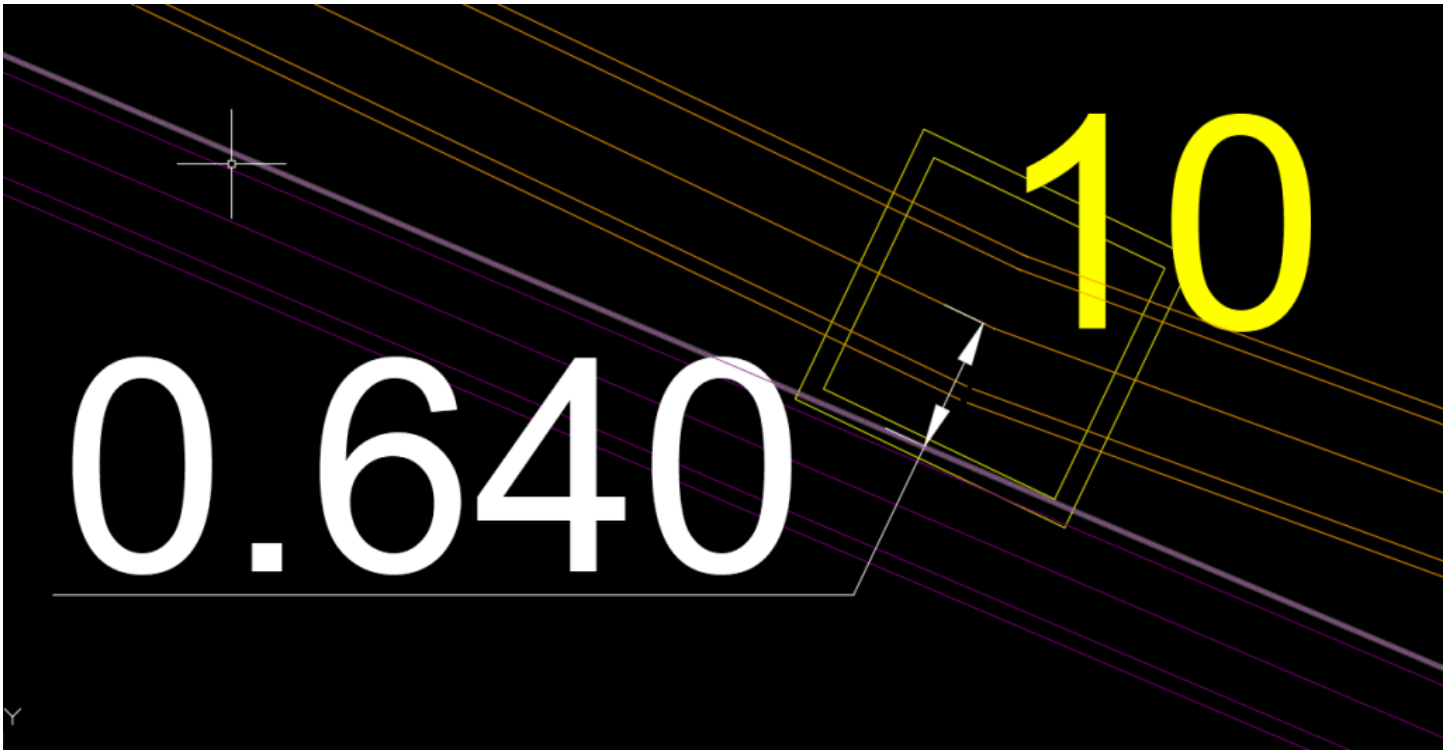

Distance from the Center of Sump 10 to the Outer Edge of Sewer 3 = 0.64m	Effective Diameter of Sump 10 (Radius of the outer diameter) = OuterDiameter / 2 = [1200mm + 200mm + 200mm] = 800mm

Horizontal Clearance	=	0.640m - 0.800m
	=	-0.160m

“+” clash

A positive clearance denotes that the gaps between utilities are ***less than the minimum requirement of the clearance***, but they ***are not clashing with one another***.

The minimum horizontal clearance required can be adjusted in the **Parameter Settings**, which can be referred to further in our user guide, ***Starting Clash Analysis***.

An example of the "+" clash is shown in the diagrams below.

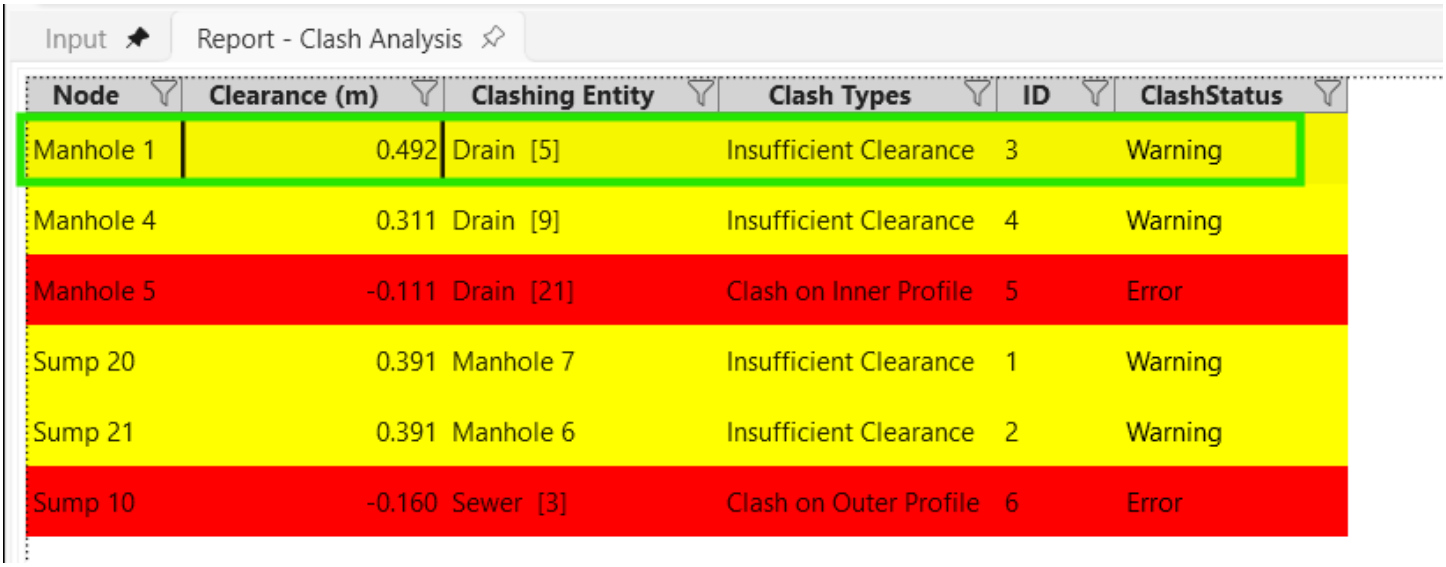

Node	Clearance (m)	Clashing Entity	Clash Types	ID	ClashStatus
Manhole 1	0.492	Drain [5]	Insufficient Clearance	3	Warning
Manhole 4	0.311	Drain [9]	Insufficient Clearance	4	Warning
Manhole 5	-0.111	Drain [21]	Clash on Inner Profile	5	Error
Sump 20	0.391	Manhole 7	Insufficient Clearance	1	Warning
Sump 21	0.391	Manhole 6	Insufficient Clearance	2	Warning
Sump 10	-0.160	Sewer [3]	Clash on Outer Profile	6	Error

Manhole 1 and Drain 5 are quite near to each other, with a clearance of 0.492m

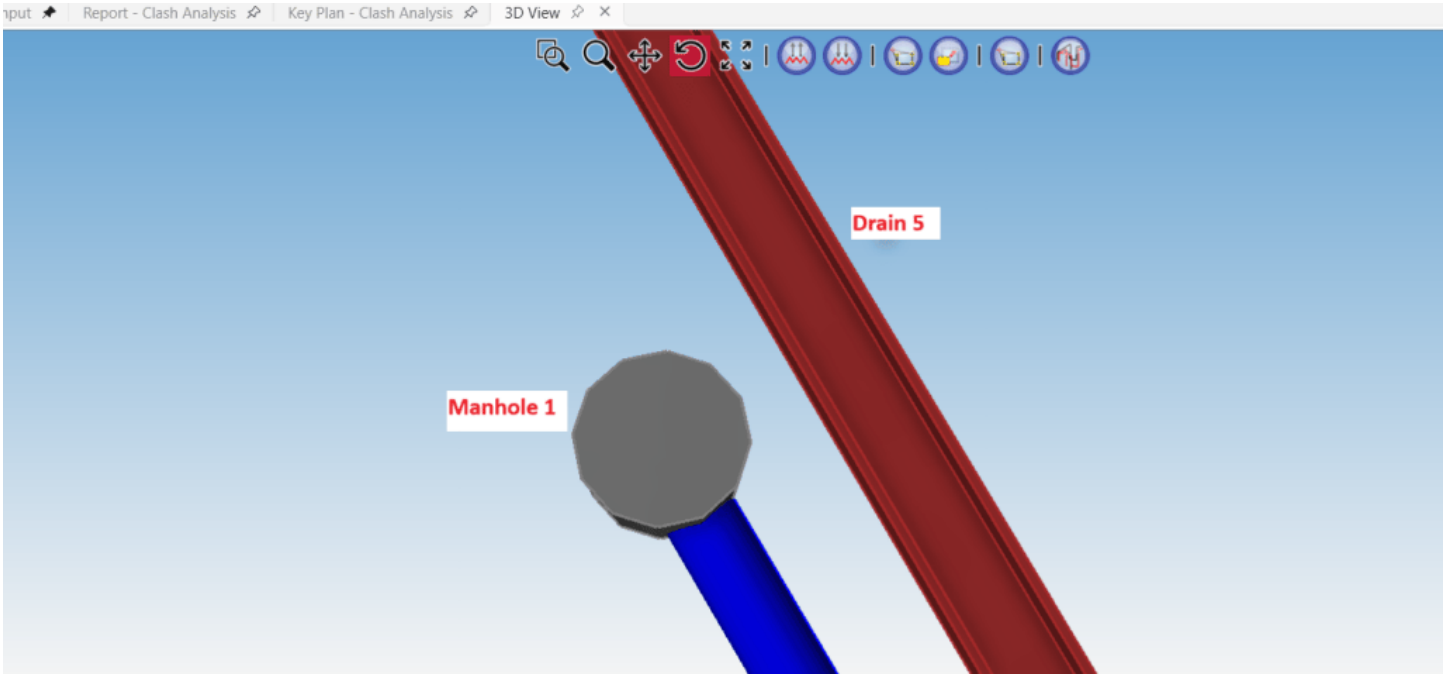

In a 3D View

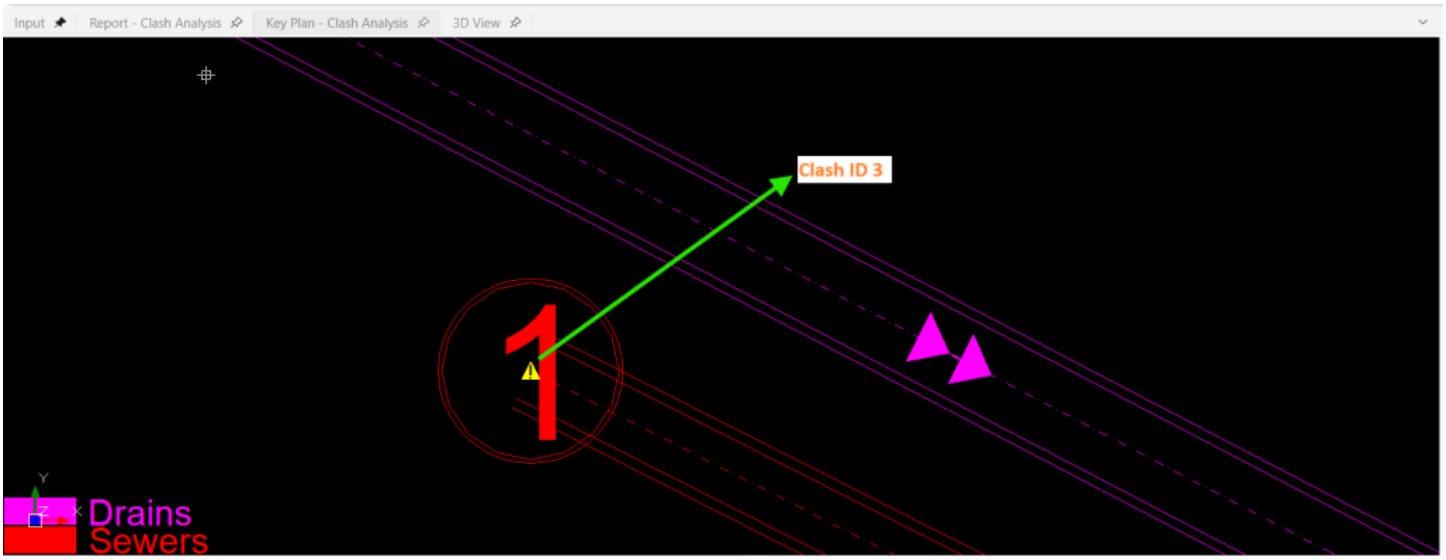

As the above diagrams observed, the utilities are not clashing. However, the gap between them is less than the required 600mm. The measurement is calculated between the minimum distance of the outer profile.

Computation

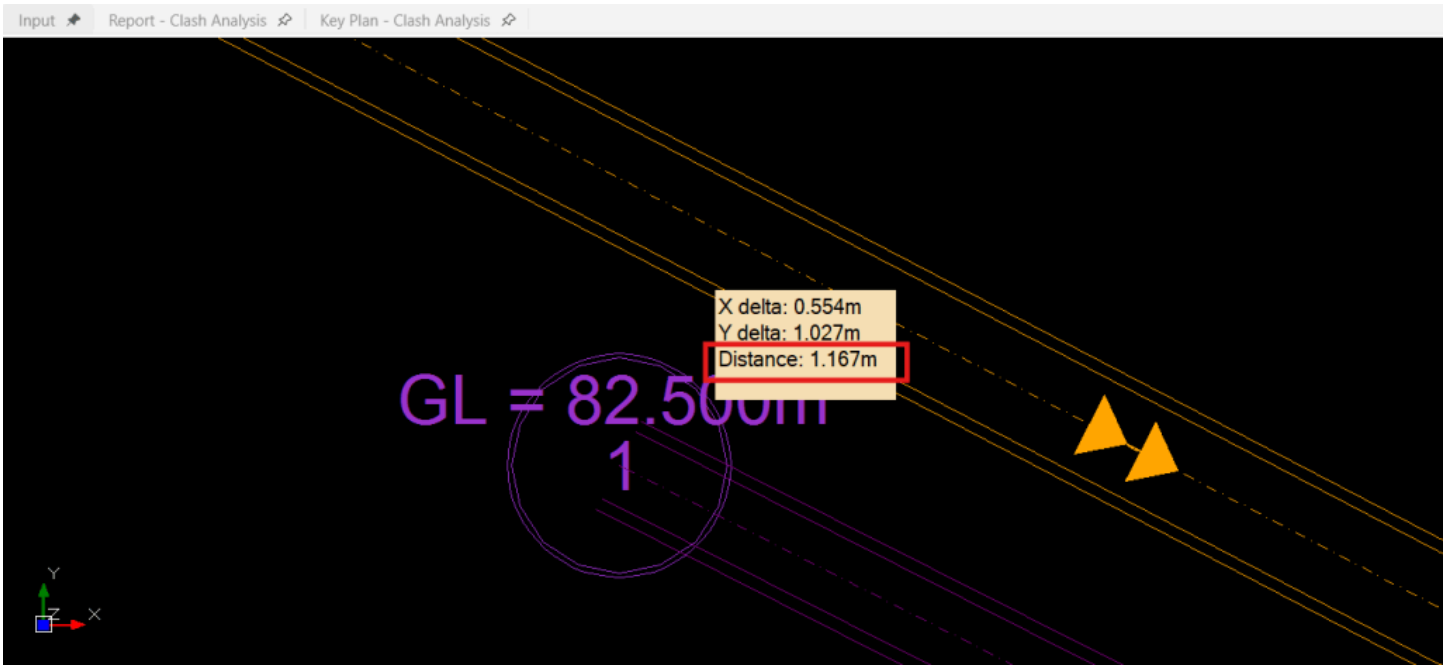

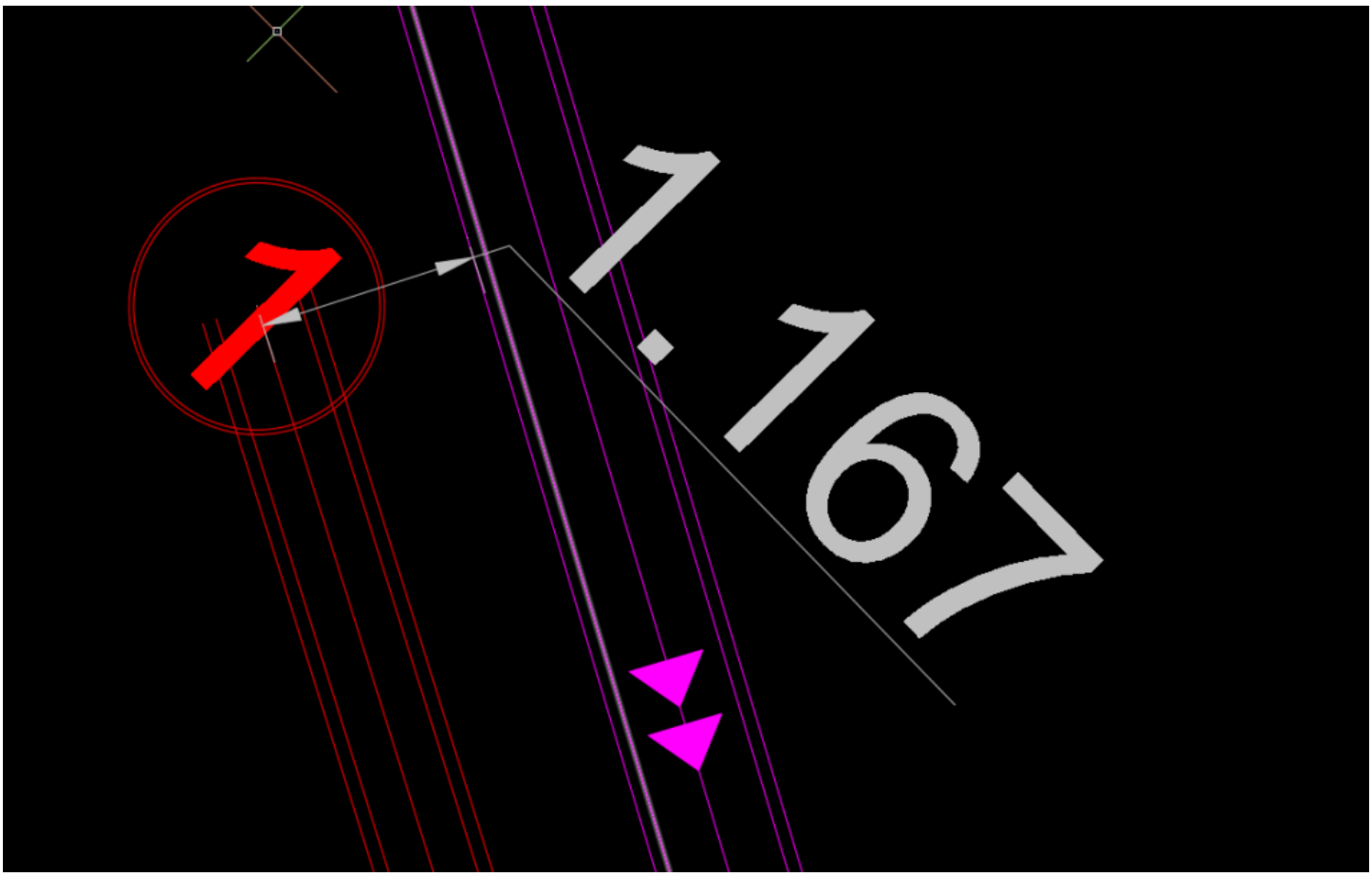

Distance from the Center of Manhole 1 to the Outer Edge of Drain 5 = 1.167m	Effective Diameter of Manhole 1 (Radius of the outer diameter) = OuterDiameter / 2 = [1300mm + 25mm + 25mm] / 2 = 675mm

Horizontal Clearance	=	1.167m - 0.675m
	=	0.492m

Further explanation of the computation related to the Horizontal Clearance, can be referred to our article, ***Clash Point Solution***.

How About Vertical Clash Analysis?

Vertical clash computations are still the same, you may refer to this in our blog posts, ***Clash Point Solution*** and ***Clash Analysis Outcome*** for guidelines.

Related



Ngu Soon Hui

I'm the Benevolent Dictator for Life for MiTS Software cum Editor of this website. Read more here.

You can also contact me at soonhui@mes100.com