How to Start Slope at a Certain Level?

Earthwork · https://mes100.com/docs/how-to-start-slope-at-a-certain-level/

In MiTS 2. users can customise the starting level of the slope in their project. This can provide users with more design flexibility. So how can users start the slope at a certain level?

Platform Editor

Users may go to the platform editor to adjust the slope starting level. To go to the platform editor, users may go to *Input* > *Platform* '*x*' > *Double-click platform* '*x*'. Users may also click the '**...**' button in the 'Height' column of the spread input tab.

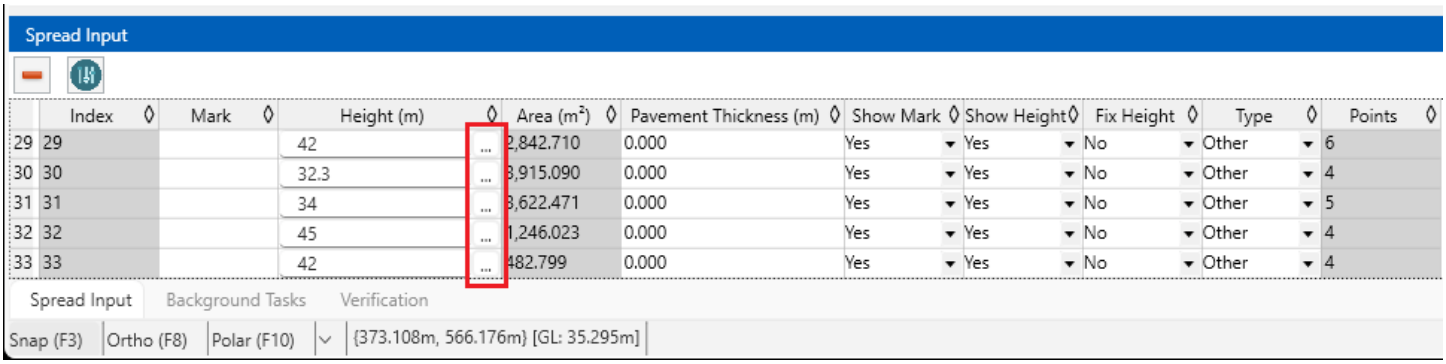

This platform editor window will pop up. Users can adjust the slope starting level of the chosen edge by clicking the '**...**' button in the 'Slope Start Configuration' column.

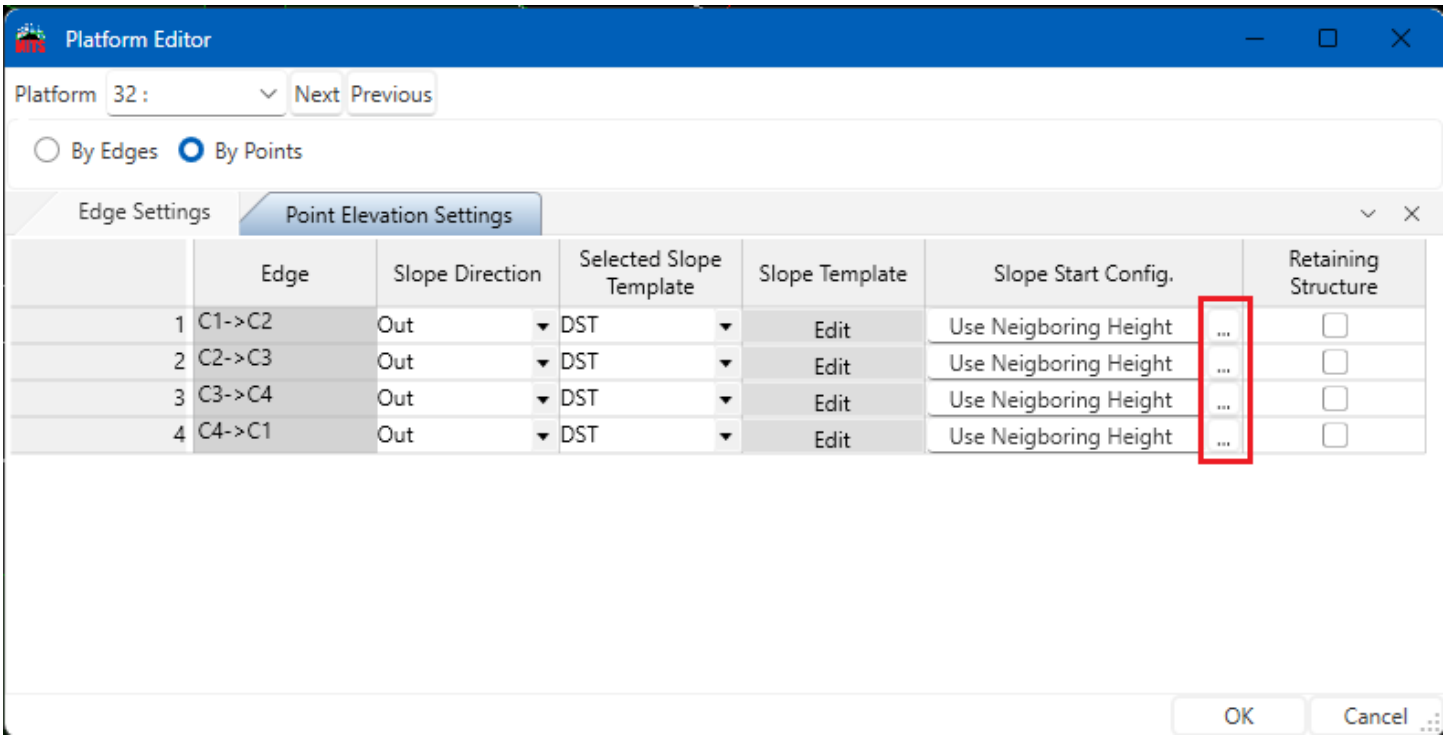

Wall Height Editor

The 'Wall Height Editor' window will pop up. There are three options for users to choose from.

Use Neighbour

- The slope starting point will automatically match the platform height = 45m

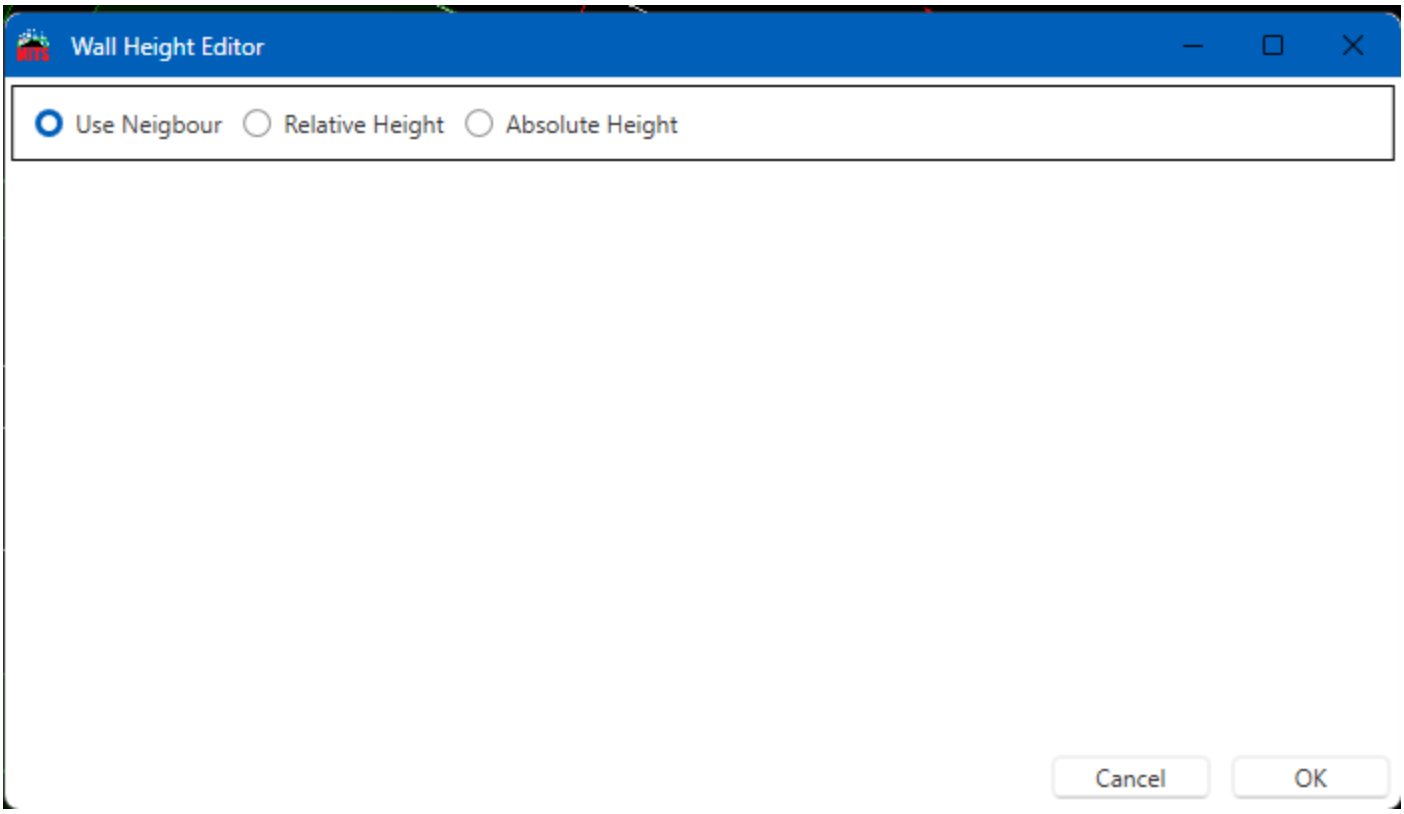
Wall Height Editor
Use Neigbour
Relative Height
Absolute Height
Cancel
OK

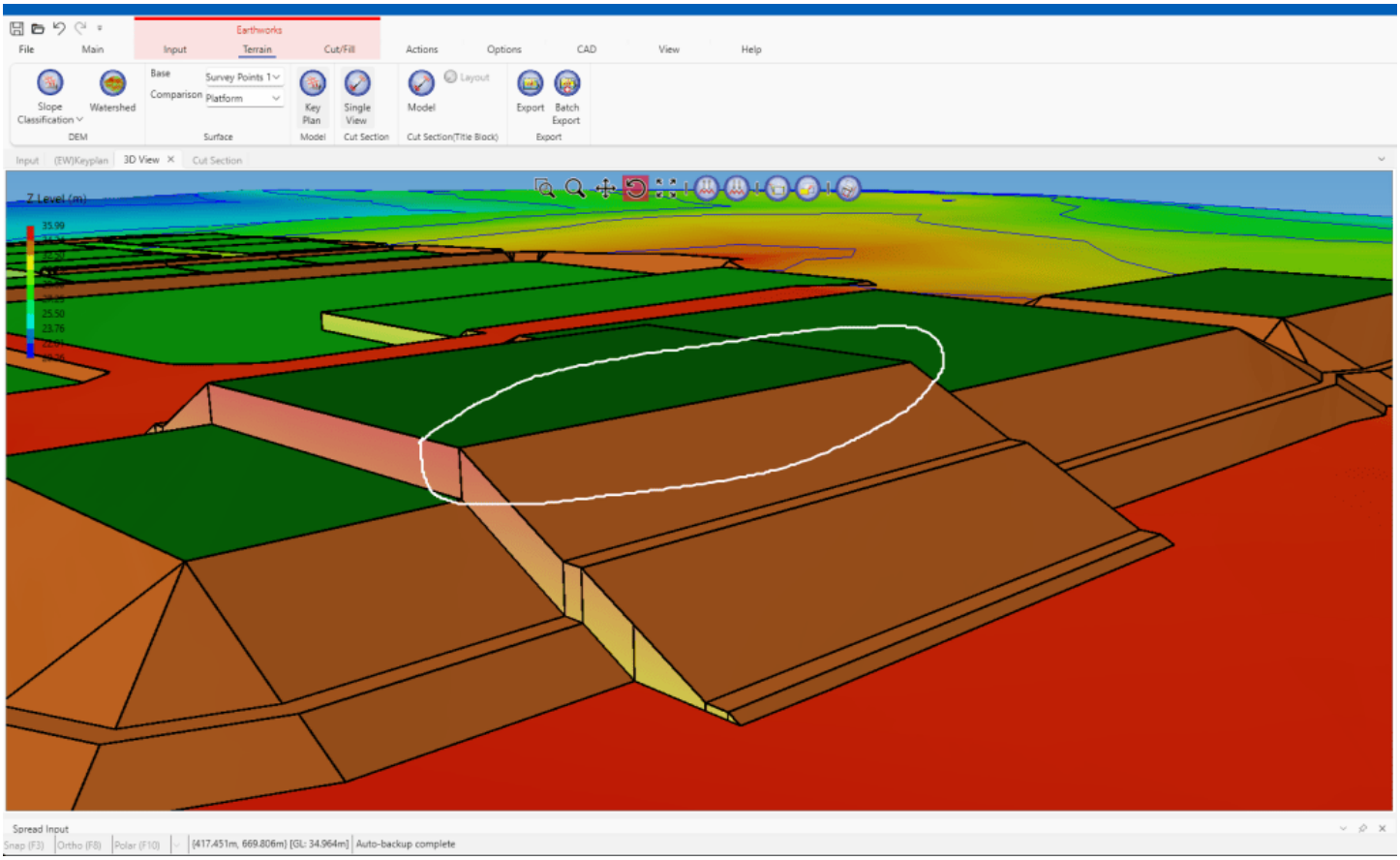
Earthworks
File
Main
Input
Terrain
Cut/Fill
Actions
Options
CAD
View
Help
Slope Classification
Watershed
DEM
Base
Survey Points 1
Comparison
Platform
Surface
Key Plan
Model
Single View
Cut Section
Model
Cut Section(Title Block)
Export
Batch Export
Export
Input
(EW)Keyplan
3D View
Cut Section
Z Level (m)
35.99
25.50
23.76
Spread Input
Snap (F3)
Ortho (F8)
Polar (F10)
(417.451m, 669.806m) [GL: 34.964m]
Auto-backup complete

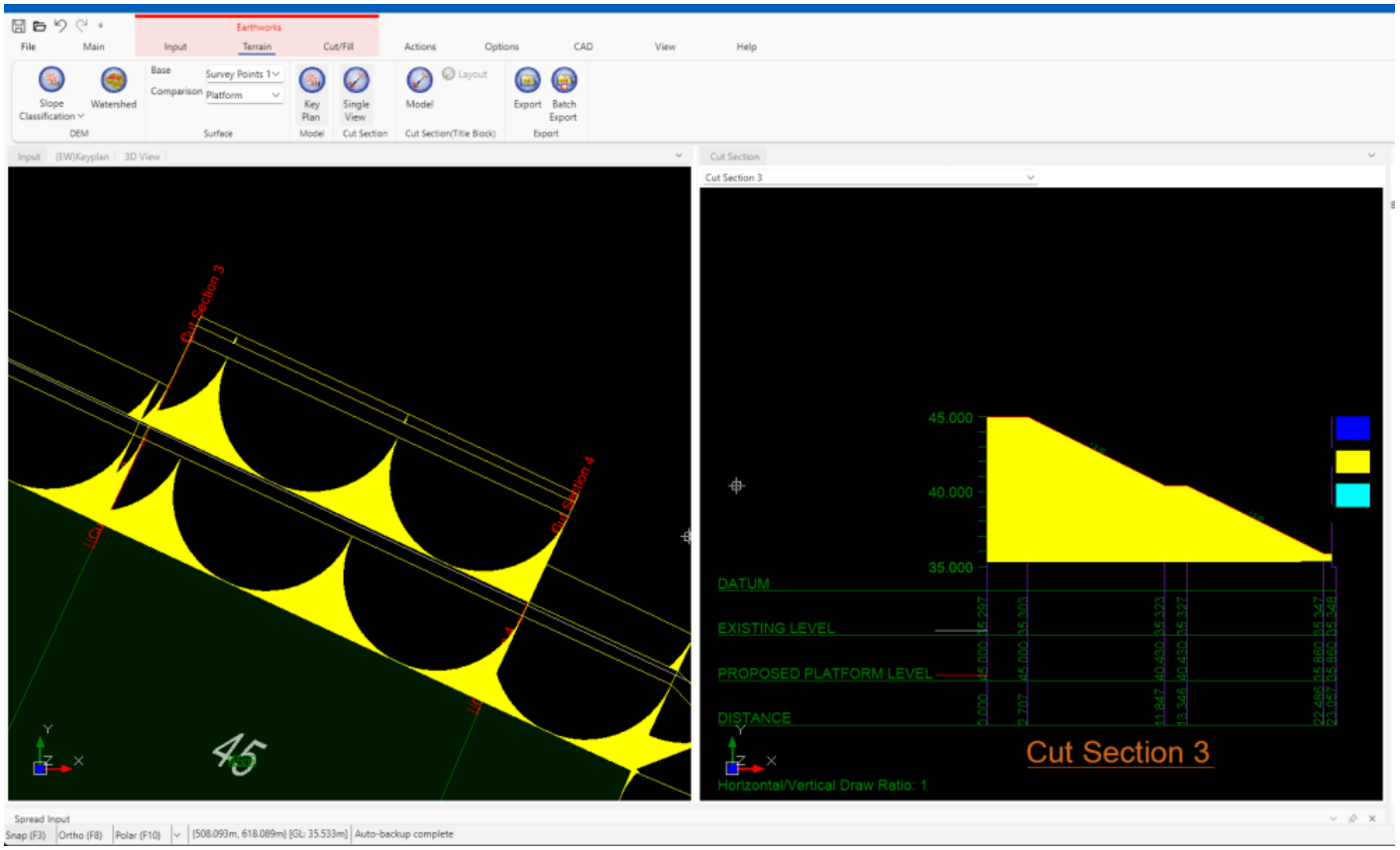

Cut Section 3

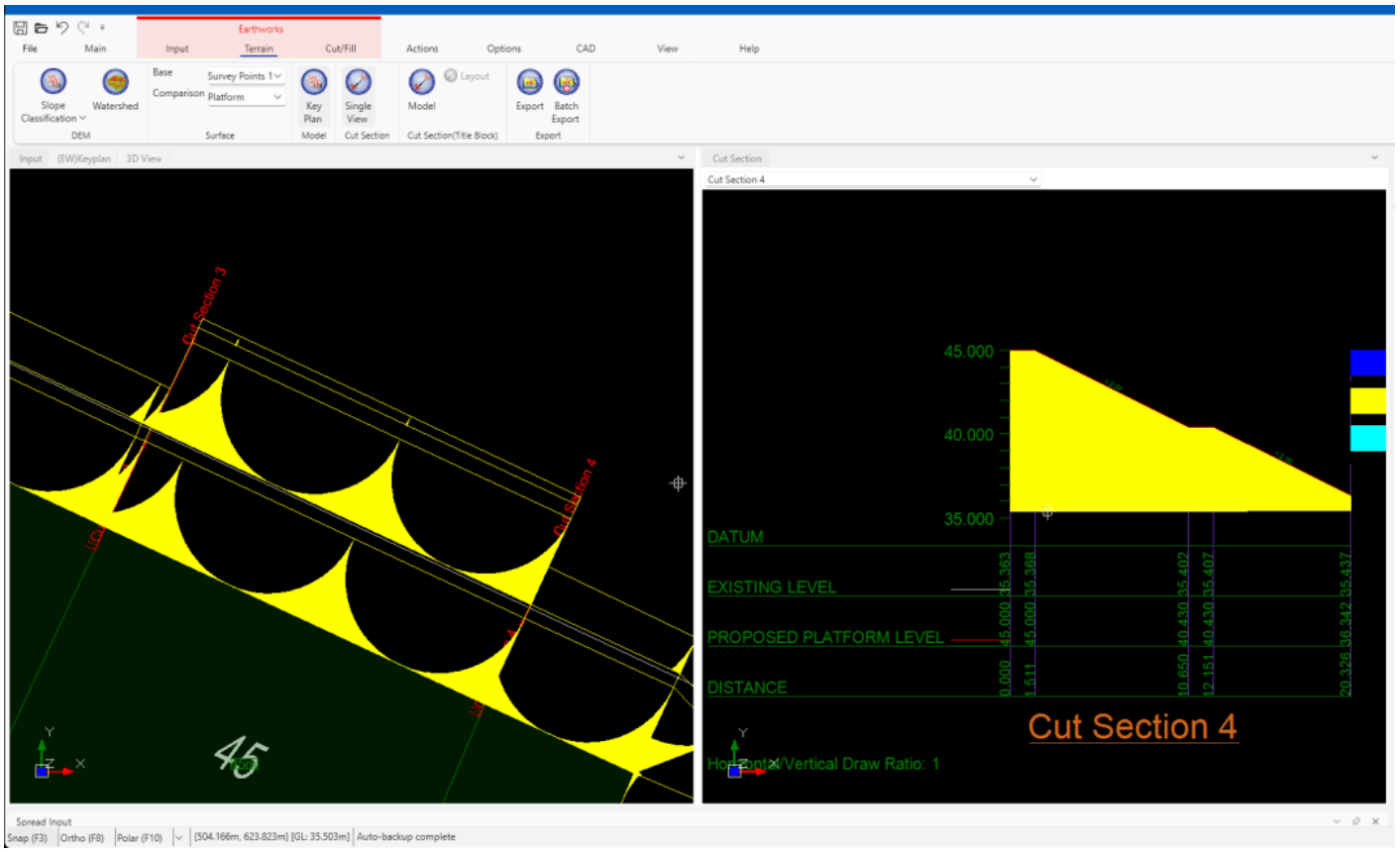

Cut Section 4

Relative Height

- The input value is an offset value from the platform level
- (-) negative value: Slope starting point = Platform level minus input value [C1 = 45 - 3 = 42m], [C4 = 45 - 4 = 41m]
- (+) positive value: Slope starting level = Platform level add input value
- As shown in the 3D view and cut section view, the slope starting point is the negative input value minus from the platform level which is 41m and 42m where both points are lower than the platform level (45m)

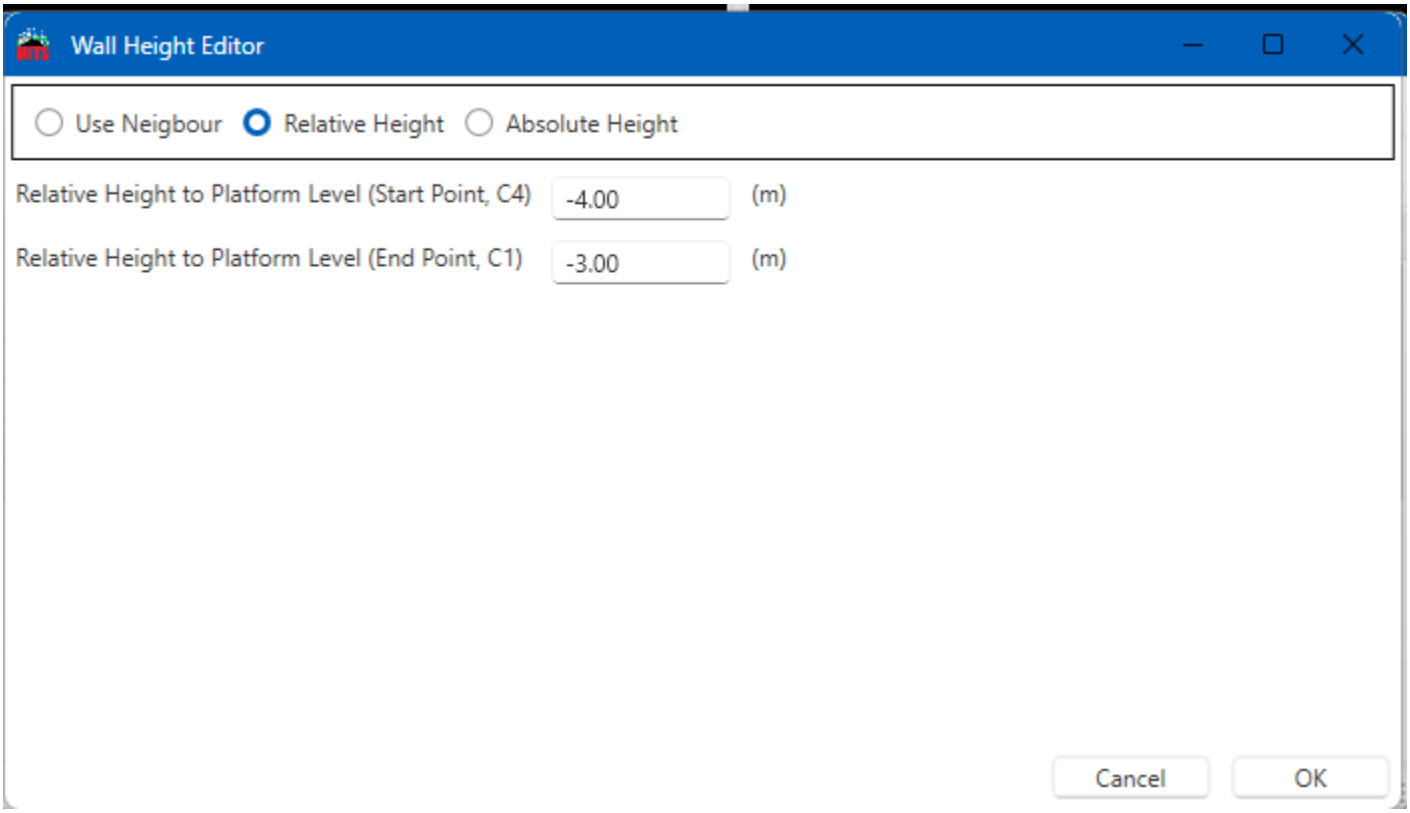

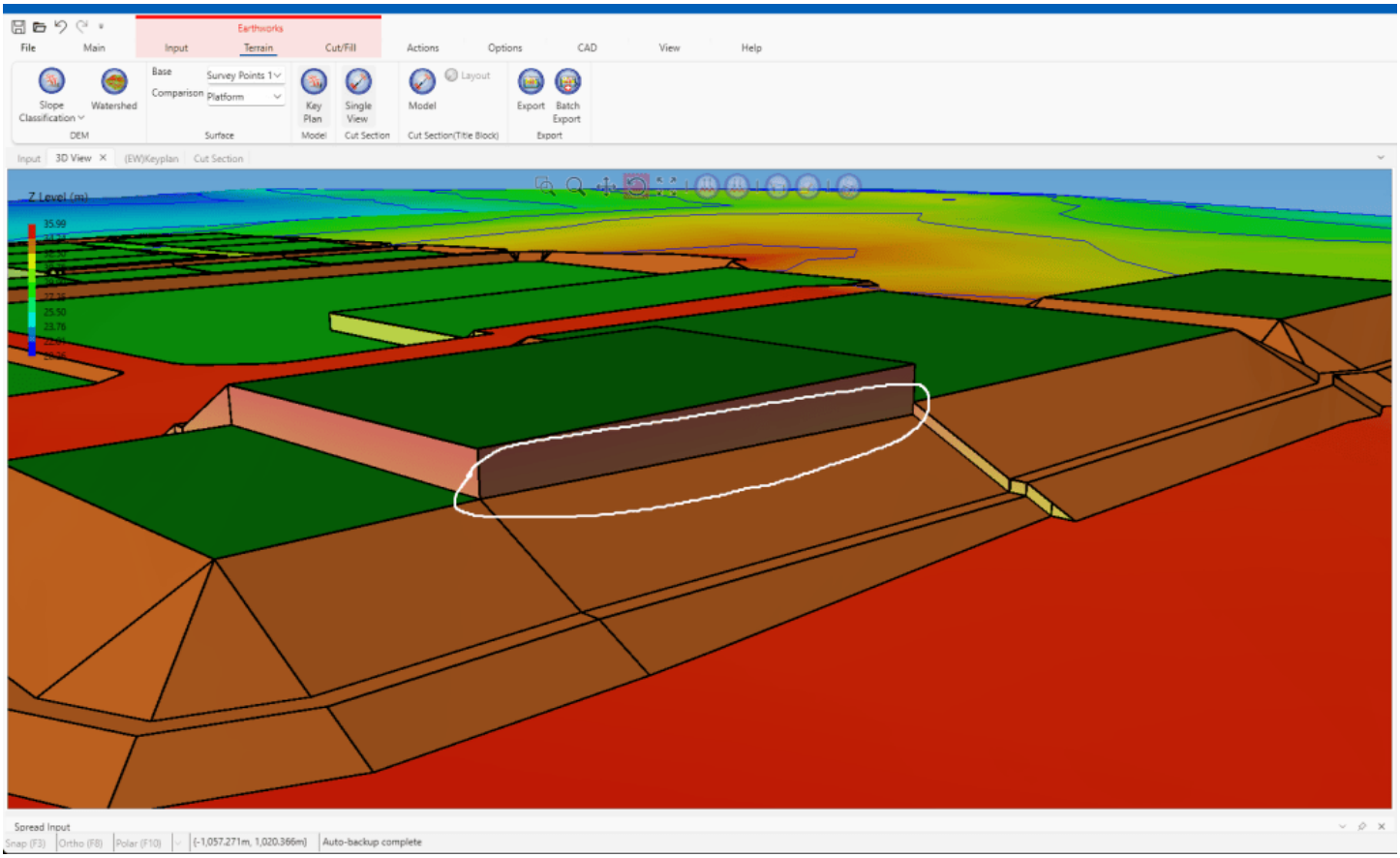
Earthworks
File
Main
Input
Terrain
Cut/Fill
Actions
Options
CAD
View
Help
Slope Classification
Watershed
DEM
Base
Survey Points 1
Comparison
Platform
Surface
Key Plan
Model
Single View
Cut Section
Layout
Model
Cut Section(Title Block)
Export
Batch Export
Export
Input
3D View
(EW)Keyplan
Cut Section
Z Level (m)
35.99
25.50
23.76
Spread Input
Snap (F3)
Ortho (F8)
Polar (F10)
(-1,057.271m, 1,020.366m)
Auto-backup complete

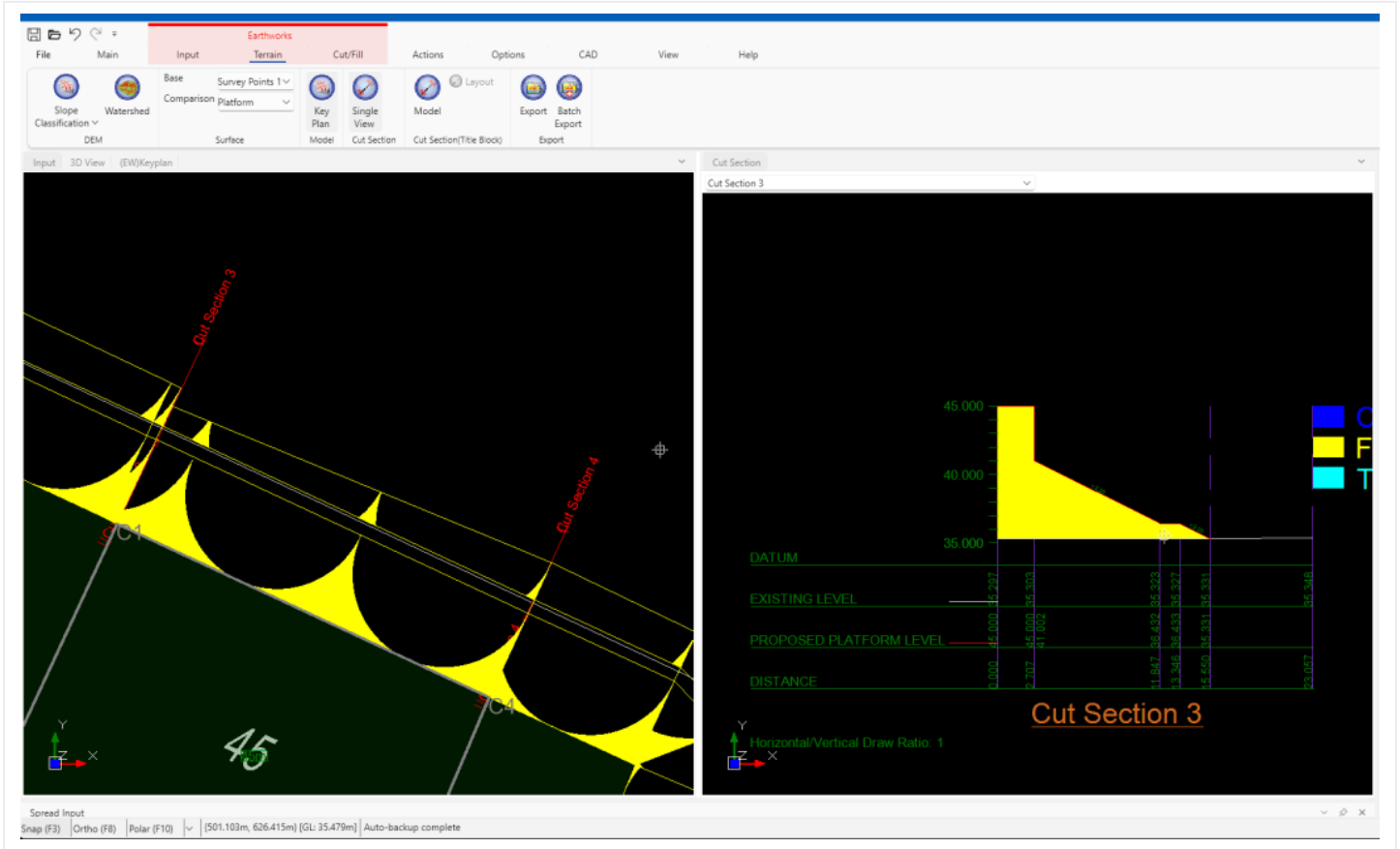
Earthworks
File
Main
Input
Terrain
Cut/Fill
Actions
Options
CAD
View
Help
Slope Classification
Watershed
DEM
Base
Survey Points 1
Comparison
Platform
Surface
Key Plan
Model
Single View
Cut Section
Layout
Model
Cut Section(Title Block)
Export
Batch Export
Export
Input
3D View
(EW)Keyplan
Cut Section
Cut Section 3
Cut Section 3
Cut Section 4
LOC1
LOC1
45
45.000
40.000
35.000
DATUM
EXISTING LEVEL
PROPOSED PLATFORM LEVEL
DISTANCE
Cut Section 3
Horizontal/Vertical Draw Ratio: 1
Spread Input
Snap (F3)
Ortho (F8)
Polar (F10)
(501.103m, 626.415m) [GL: 35.479m]
Auto-backup complete

Cut Section 3

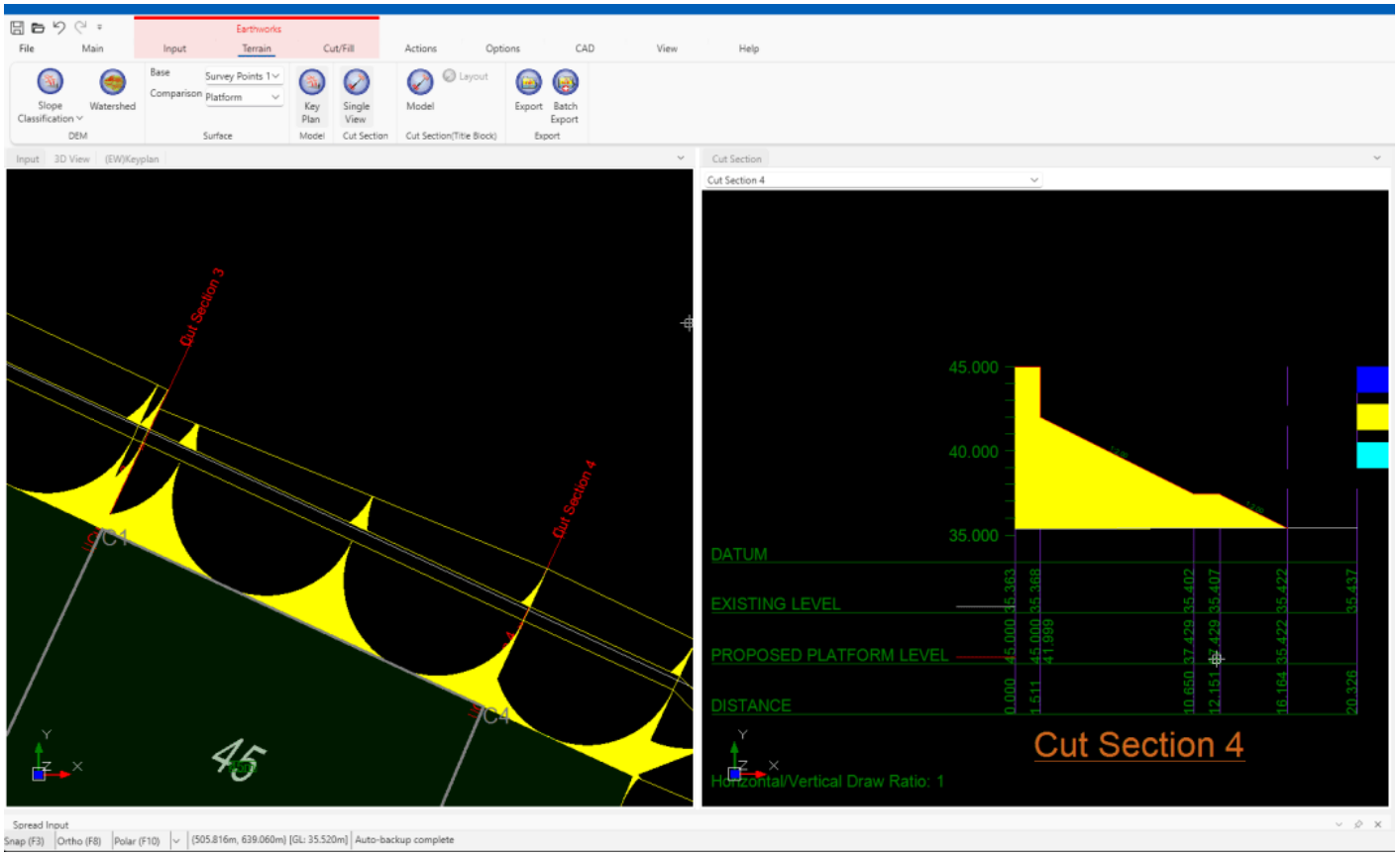

Cut Section 4

Absolute Height

- The slope starting point is set by the user
- The height of each edge point also be displayed
- As shown in the 3D view and cut section view, the slope starting point is set below the platform level (45m) which are 40m and 42m

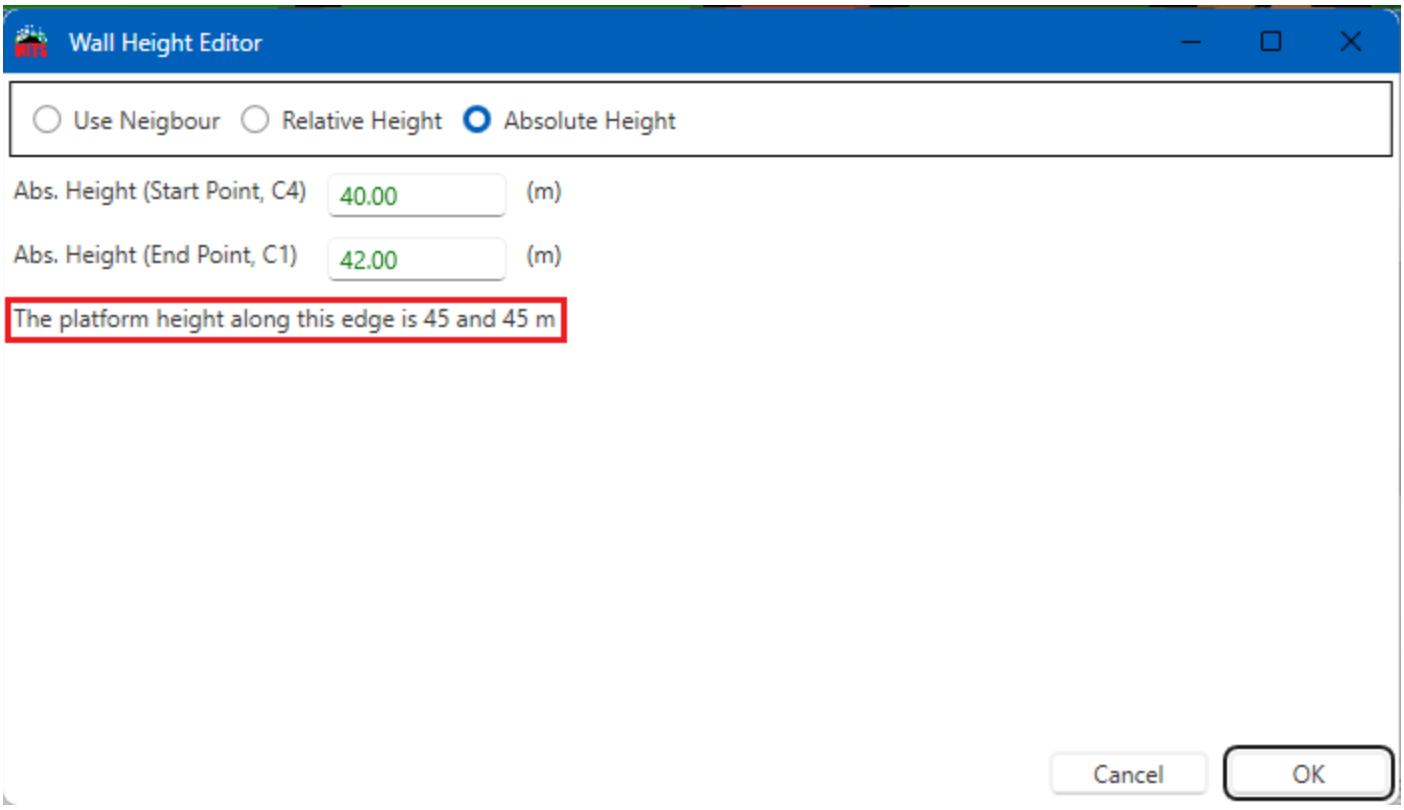
Wall Height Editor
Use Neigbour
Relative Height
Absolute Height
Abs. Height (Start Point, C4)
40.00
(m)
Abs. Height (End Point, C1)
42.00
(m)
The platform height along this edge is 45 and 45 m
Cancel
OK

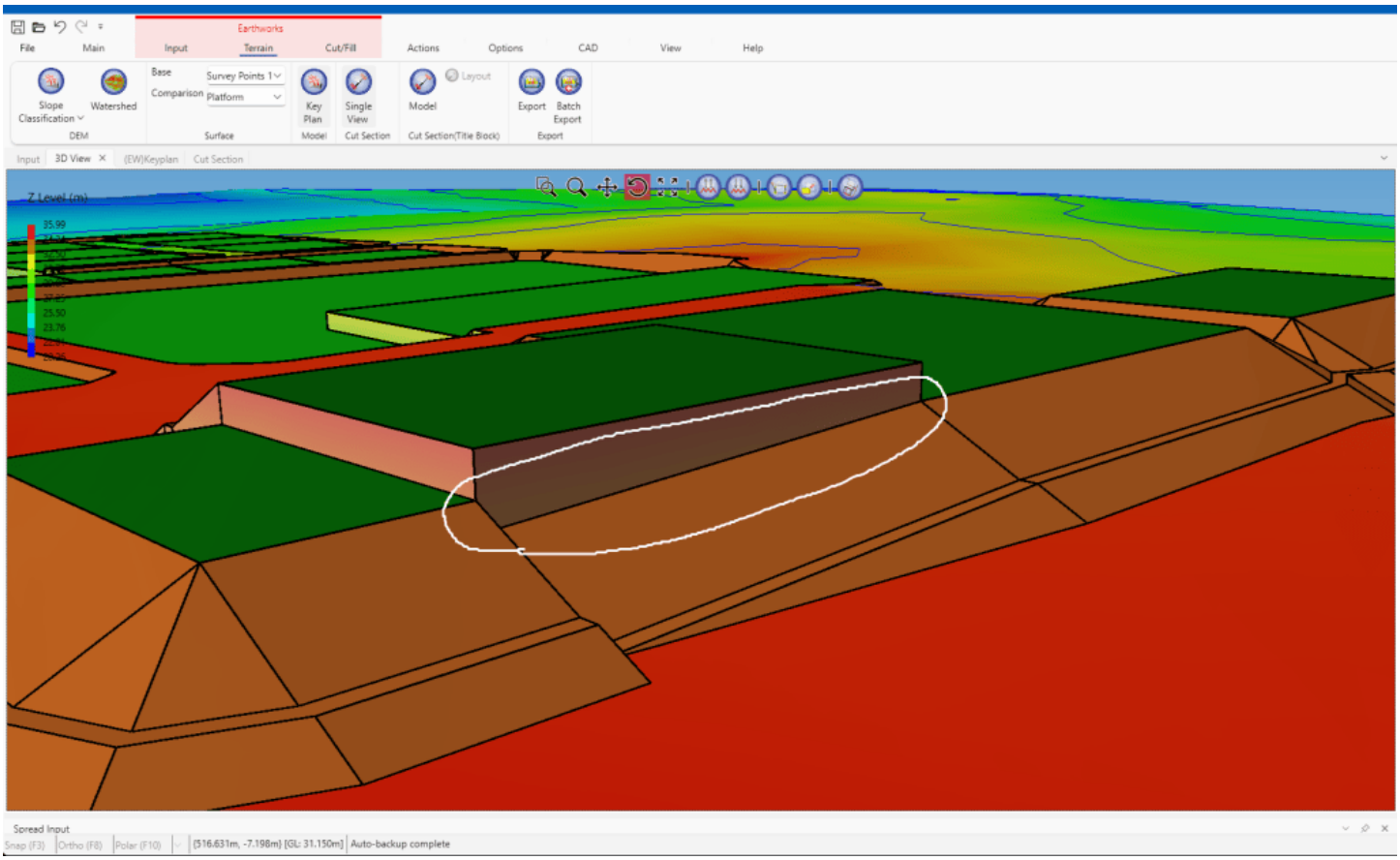
Earthworks
File
Main
Input
Terrain
Cut/Fill
Actions
Options
CAD
View
Help
Slope Classification
Watershed
DEM
Base
Survey Points 1
Comparison
Platform
Surface
Key Plan
Single View
Model
Cut Section
Export
Batch Export
Spread Input

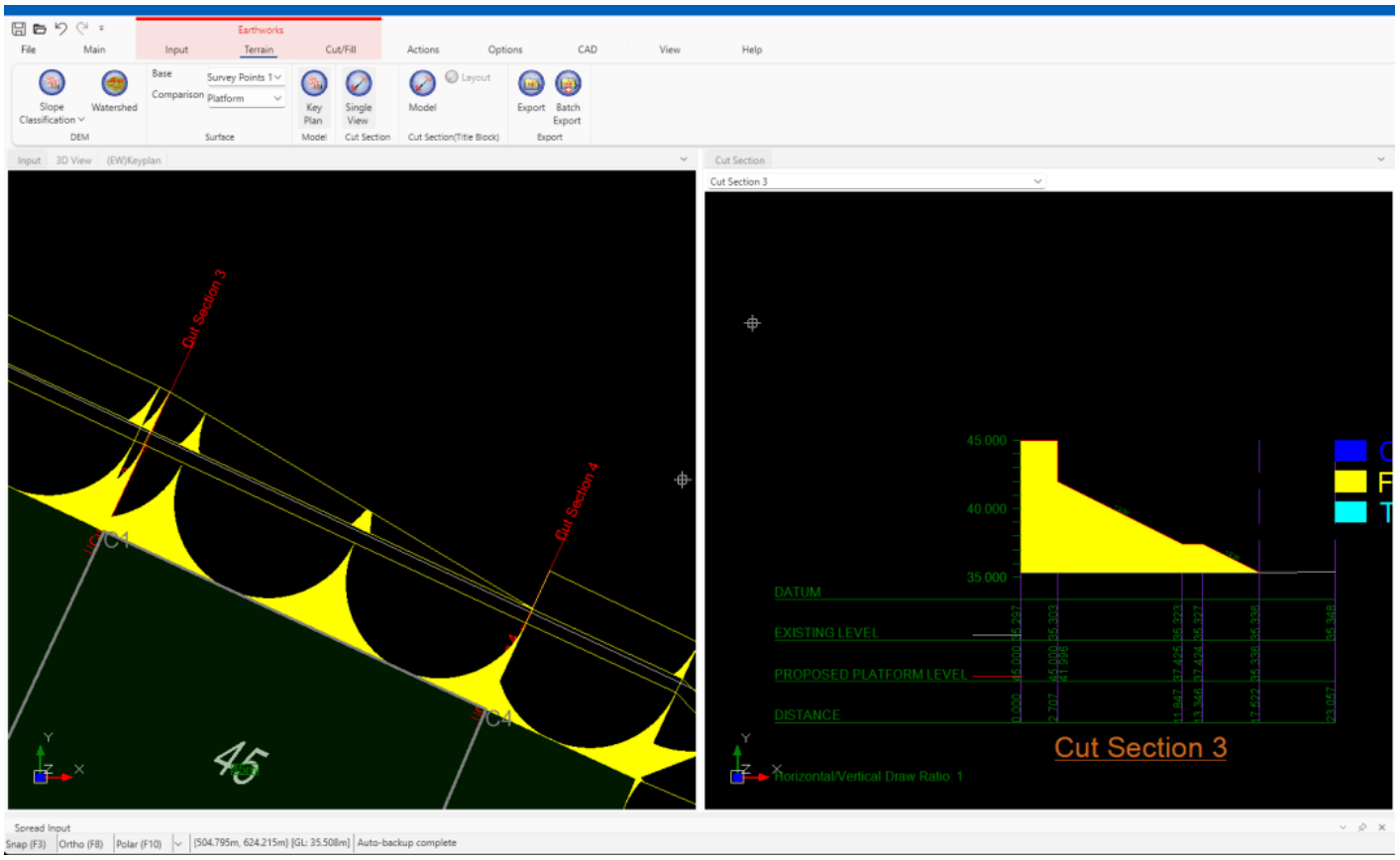

Cut Section 3

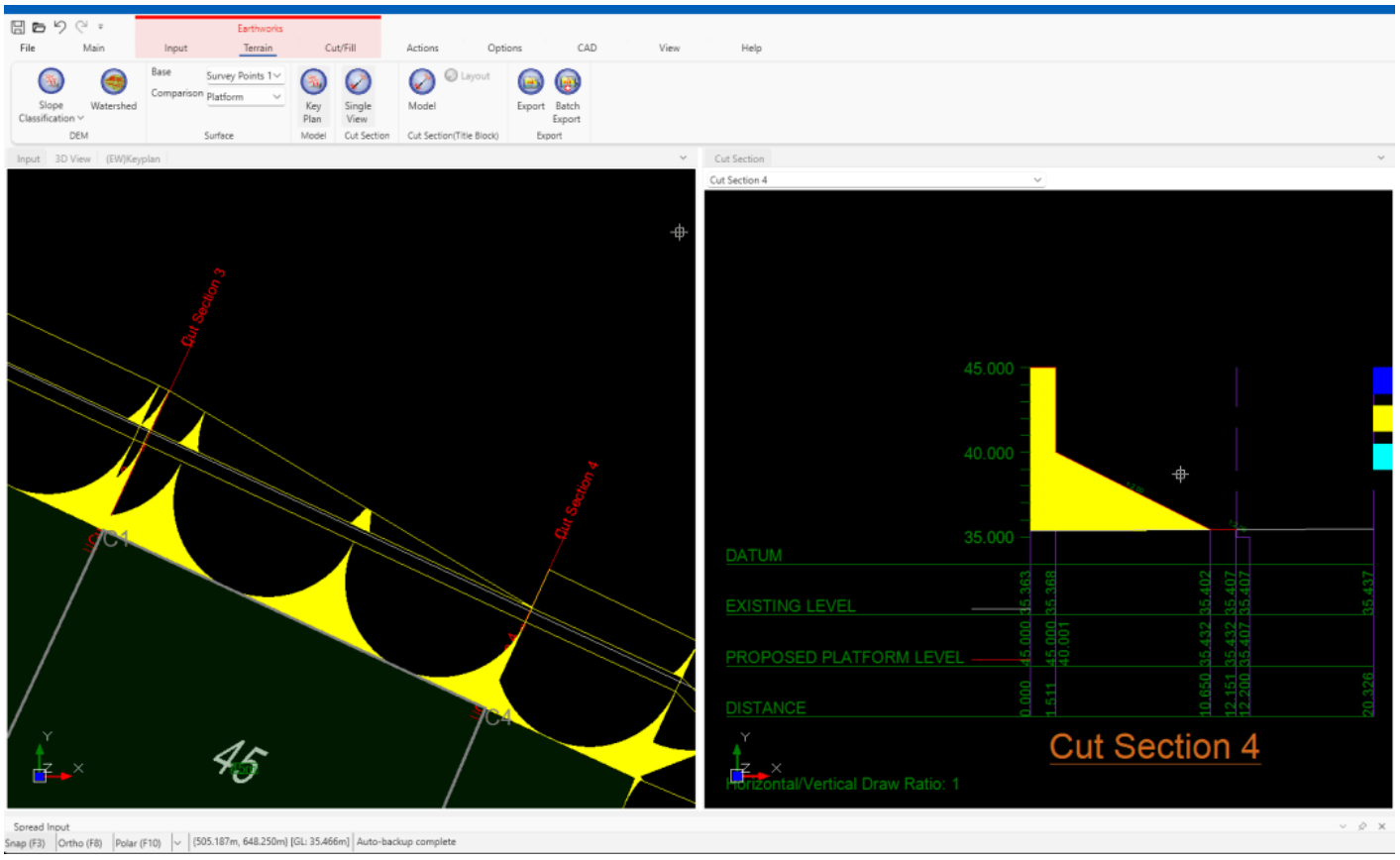

Cut Section 4

Note: Users can also adjust the slope starting point if they click 'By Edges'. The steps are the same as the above steps.

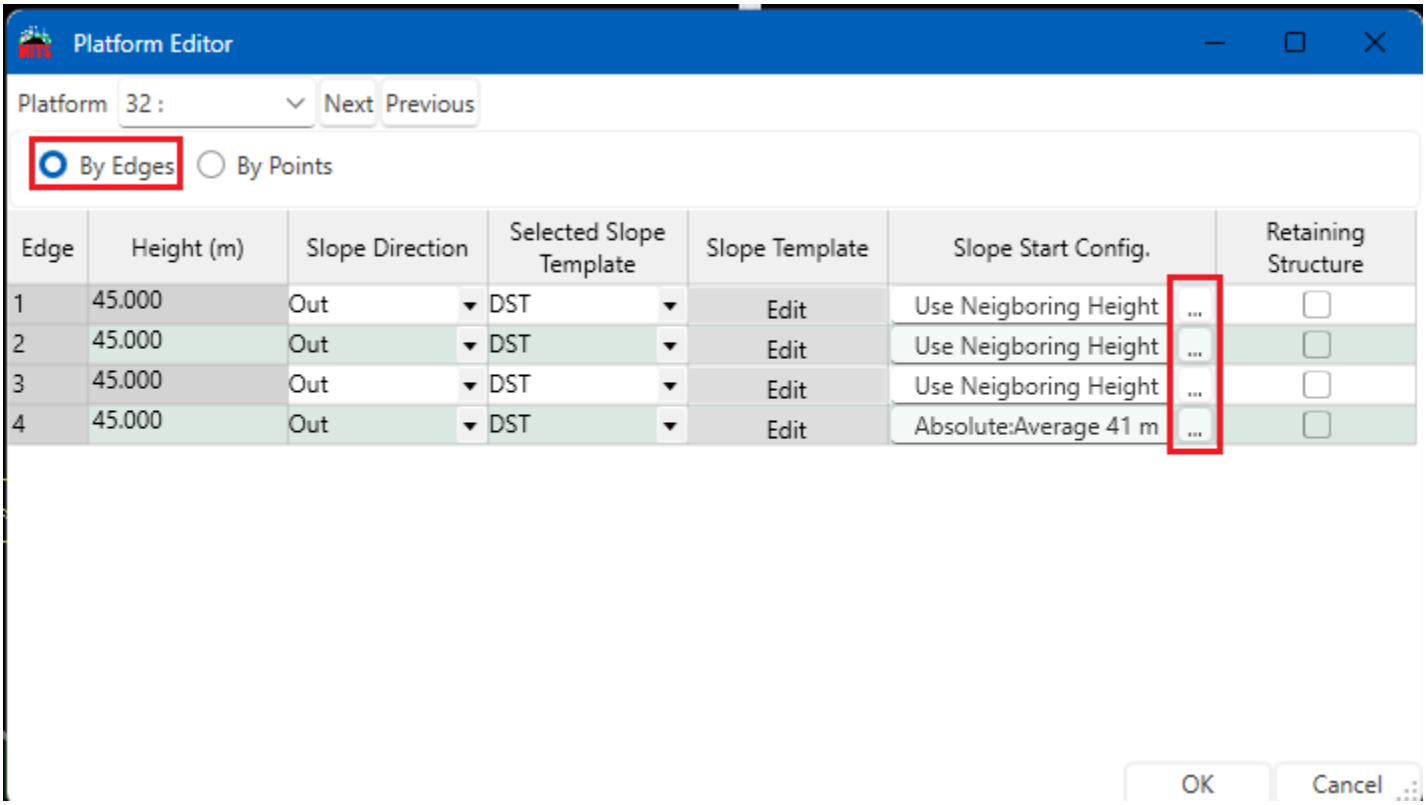

Related



Ngu Soon Hui

I'm the Benevolent Dictator for Life for MiTS Software cum Editor of this website. Read more here.

You can also contact me at soonhui@mes100.com