Benchmark of Result between Water Reticulation module in MiTS and EPA Net

Water · https://mes100.com/docs/benchmark-of-result-between-water-reticulation-module-in-mits-and-epa-net/

The water reticulation project can now be exported to EPA Net format. However, several conditions must be met for the results to match:

1. The Fire Flow Supply Level should be calculated using the Highest Supply Level (HSL). When exporting to EPA Net, the node elevation data in EPA Net will be based on this setting, whether Ground Level (GL) or HSL from MiTS. Take note that peak and average flow used HSL data for their calculation, so if the Fire Flow Supply Level is GL, then the residual pressure might differ a bit between MiTS and EPA Net for nodes with tank water level, since HSL = GL + Tank water level. You might refer to this **blog post** for more information regarding MiTS calculation in water reticulation.
   - *Options > Project Settings > Water Ret > Design > Fire Flow > Fire Flow Supply Level == GL/HSL*
2. Compared with MiTS, EPA Net did not have the Sluice Valve and Non-return Valve, so make sure the valve used in MiTS did not contain this type of valve if you want to compare both software results.
3. Verify that both software have similar default values for analysis; Flow Units, Headloss Formula

Checking Default Values for Water Reticulation and EPA Net

How to check/adjust the value used in each software? You may refer to the following table.

Default Setting	Water Reticulation	EPA Net
Flow Unit = LPS	Options > Project Settings > Water Ret > Input > Water Demand Units	Ribbon Tab > Project > Analysis Options... > Flow Units

Headloss Formula = Hazen-Williams/Darcy-Weisbach	Options > Project Settings > Water Ret > Design > Headloss Formula	Ribbon Tab > Project > Analysis Options... > Headloss Formula

Example

Project File:	**Using Hazen-Williams**
	Using Darcy-Weisbach

This example project file has both MiTS and EPA Net's projects. The project file contains a pump curve, pressure breaking valve (PBV) and tank water level.

The terms used in MiTS and EPA Net are different. Below are the terms used in both software.

MiTS	EPA Net
Pipe	Link/Pipe
Node	Node/Junction
HWC/DWC	Roughness
Highest Supply Level	Elevation
Flow	Demand
HGL	Head
Residual Pressure	Pressure

Design

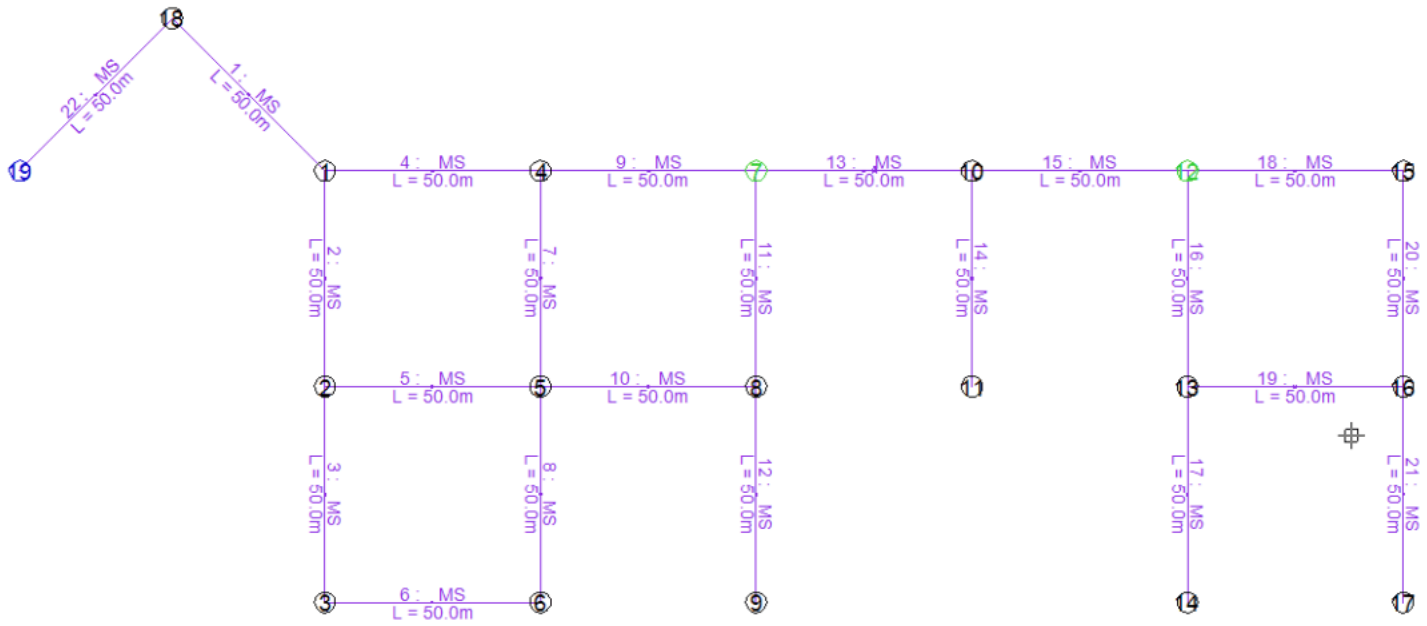

MiTS: Water Reticulation

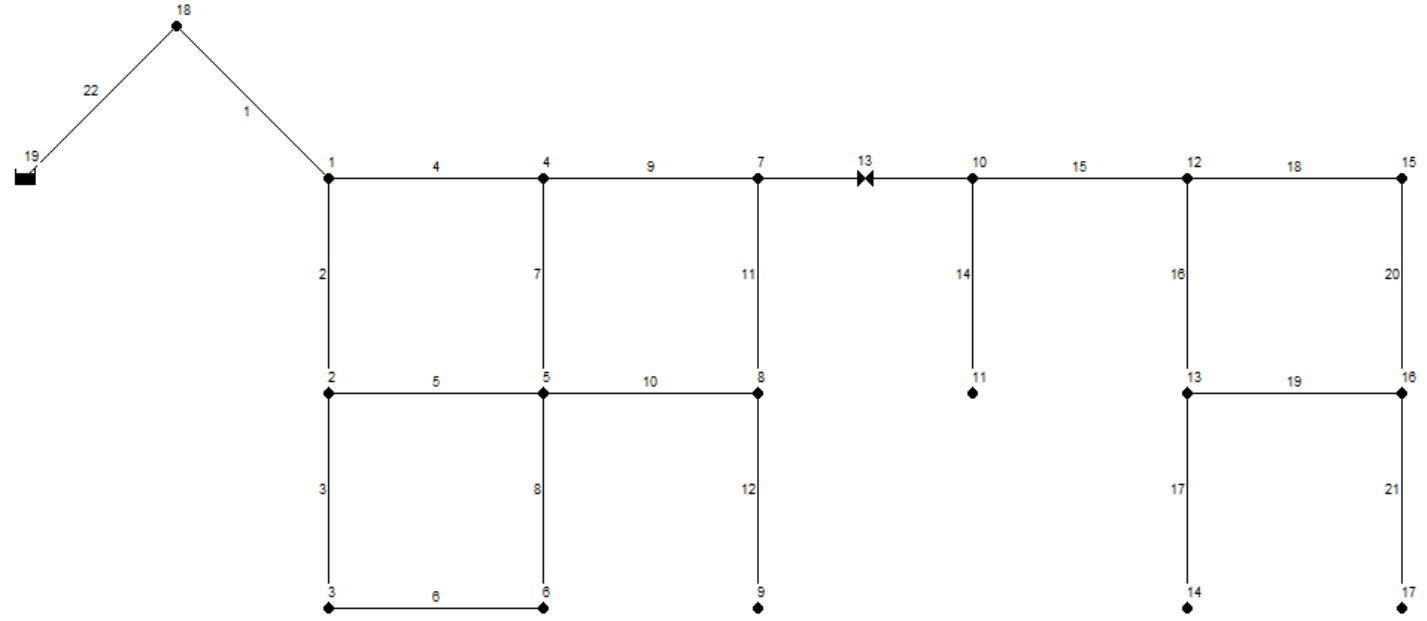

EPA Net

Formula: Hazen-Williams

Average Flow

Pipe for Average Flow

Pipe No	Length (m)	Inner Diameter (mm)	HWC	Flow (LPS	Velocity (MPS)	Head Loss (m/km)
1	50.000	200.000	130.000	41.140	1.310	8.939HI
2	50.000	200.000	130.000	17.777	0.566	1.890
3	50.000	200.000	130.000	15.489	0.493	1.464
4	50.000	200.000	130.000	15.663	0.499	1.495
5	50.000	200.000	130.000	1.929	0.061LO	0.031
6	50.000	200.000	130.000	10.511	0.335	0.714
7	50.000	200.000	130.000	7.953	0.253LO	0.426
8	50.000	200.000	130.000	10.551	0.336	0.719
9	50.000	200.000	130.000	7.289	0.232LO	0.363
10	50.000	200.000	130.000	1.289	0.041LO	0.015
11	50.000	200.000	130.000	2.469	0.079LO	0.049
12	50.000	200.000	130.000	1.020	0.032LO	0.009
13 TCV	-	200.000	-	4.720	-	-
14	50.000	200.000	130.000	1.220	0.039LO	0.013
15	50.000	200.000	130.000	3.140	0.100LO	0.076
16	50.000	200.000	130.000	1.774	0.056LO	0.026
17	50.000	200.000	130.000	1.420	0.045LO	0.018
18	50.000	200.000	130.000	1.326	0.042LO	0.015
19	50.000	200.000	130.000	0.014	0.000LO	0.000
20	50.000	200.000	130.000	1.106	0.035LO	0.011
21	50.000	200.000	130.000	1.020	0.032LO	0.009
22	50.000	200.000	130.000	49.140	1.564	12.423HI

MiTS: Water Reticulation

Network Table - Links

Link ID	Length m	Diameter mm	Roughness	Flow LPS	Velocity m/s	Unit Headloss m/km
Pipe 1	49.9995204977008	200	130	41.140	1.310	8.939
Pipe 2	50	200	130	17.777	0.566	1.890
Pipe 3	50	200	130	15.489	0.493	1.464
Pipe 4	50	200	130	15.663	0.499	1.495
Pipe 5	50	200	130	1.929	0.061	0.031
Pipe 6	50	200	130	-10.511	0.335	0.714
Pipe 7	50	200	130	7.953	0.253	0.426
Pipe 8	50	200	130	10.551	0.336	0.719
Pipe 9	50	200	130	7.289	0.232	0.363
Pipe 10	50	200	130	-1.289	0.041	0.015
Pipe 11	50	200	130	2.469	0.079	0.049
Pipe 12	50	200	130	1.020	0.032	0.009
Pipe 14	50	200	130	1.220	0.039	0.013
Pipe 15	50	200	130	3.140	0.100	0.076
Pipe 16	50	200	130	1.774	0.056	0.027
Pipe 17	50	200	130	1.420	0.045	0.017
Pipe 18	50	200	130	1.326	0.042	0.015
Pipe 19	50	200	130	0.014	0.000	0.000
Pipe 20	50	200	130	1.106	0.035	0.011
Pipe 21	50	200	130	1.020	0.032	0.009
Pipe 22	50.0002276094819	200	130	49.140	1.564	12.423
Valve 13	#N/A	200	#N/A	4.720	0.150	0.001

EPA Net

Node for Average Flow

Node No	Flow (LPS)	Ground Level (m)	HGL (m)	Highest Supply Level (m)	Residual Pressure (m)
1	-7.700	31.257	48.932	31.257	17.675
2	-0.360	30.294	48.837	30.294	18.543
3	-26.000	29.248	48.764	29.248	19.516
4	-0.420	31.963	48.857	31.963	16.894
5	-0.620	31.135	48.836	31.135	17.701
6	-0.040	29.422	48.800	29.422	19.378
7	-0.100	32.463	48.839	32.463	16.376
8	-0.160	31.397	48.837	31.397	17.439
9	-1.020	29.898	48.836	29.898	18.938
10	-0.360	32.631	48.838	32.631	16.207
11	-1.220	31.525	48.838	31.525	17.313
12	-0.040	32.802	48.835	32.802	16.033
13	-0.340	31.723	48.833	31.723	17.111
14	-1.420	30.420	48.832	30.420	18.412
15	-0.220	33.865	48.834	33.865	14.969
16	-0.100	32.233	48.833	32.233	16.600
17	-1.020	30.753	48.833	30.753	18.080
18	-8.000	30.920	49.379	30.920	18.459
19 R	49.140	30.106	50.000	-	-

Network Table - Nodes

Node ID	Elevation m	Base Demand LPS	Demand LPS	Head m	Pressure m
Junc 1	31.2565503561041	7.7	7.700	48.932	17.675
Junc 2	30.2939872852472	0.36	0.360	48.837	18.543
Junc 3	29.2481763622978	26	26.000	48.764	19.516
Junc 4	31.9628678007966	0.42	0.420	48.857	16.894
Junc 5	31.1348399238932	0.62	0.620	48.836	17.701
Junc 6	29.4220740698302	0.04	0.040	48.800	19.378
Junc 7	32.4626864805412	0.1	0.100	48.839	16.376
Junc 8	31.3973708913645	0.16	0.160	48.837	17.439
Junc 9	29.8983522759815	1.02	1.020	48.836	18.938
Junc 10	32.6310556284916	0.36	0.360	48.838	16.207
Junc 11	31.5248317883228	1.22	1.220	48.838	17.313
Junc 12	32.8016064057686	0.04	0.040	48.835	16.033
Junc 13	31.7227160903127	0.34	0.340	48.833	17.111
Junc 14	30.4202986558342	1.42	1.420	48.832	18.412
Junc 15	33.8652390771354	0.22	0.220	48.834	14.969
Junc 16	32.2329480327147	0.1	0.100	48.833	16.600
Junc 17	30.7531970355099	1.02	1.020	48.833	18.080
Junc 18	30.919709817864	8	8.000	49.379	18.459
Resvr 19	50	#N/A	-49.140	50.000	0.000

EPA Net

Peak Flow

Pipe for Peak Flow

Pipe No	Length (m)	Inner Diameter (mm)	HWC	Flow (LPS	Velocity (MPS)	Head Loss (m/km)
1	50.000	200.000	130.000	51.425	1.637	13.514HI
2	50.000	200.000	130.000	22.222	0.707	2.857HI
3	50.000	200.000	130.000	19.361	0.616	2.214HI
4	50.000	200.000	130.000	19.578	0.623	2.260HI
5	50.000	200.000	130.000	2.411	0.077LO	0.047
6	50.000	200.000	130.000	13.139	0.418	1.080
7	50.000	200.000	130.000	9.941	0.316	0.644
8	50.000	200.000	130.000	13.189	0.420	1.087
9	50.000	200.000	130.000	9.112	0.290LO	0.548
10	50.000	200.000	130.000	1.612	0.051LO	0.022
11	50.000	200.000	130.000	3.087	0.098LO	0.074
12	50.000	200.000	130.000	1.275	0.041LO	0.014
13 TCV	-	200.000	-	5.900	-	-
14	50.000	200.000	130.000	1.525	0.049LO	0.020
15	50.000	200.000	130.000	3.925	0.125LO	0.115
16	50.000	200.000	130.000	2.218	0.071LO	0.040
17	50.000	200.000	130.000	1.775	0.056LO	0.026
18	50.000	200.000	130.000	1.657	0.053LO	0.023
19	50.000	200.000	130.000	0.018	0.001LO	0.000
20	50.000	200.000	130.000	1.382	0.044LO	0.017
21	50.000	200.000	130.000	1.275	0.041LO	0.014
22	50.000	200.000	130.000	61.425	1.955	18.780HI

Network Table - Links

Link ID	Length m	Diameter mm	Roughness	Flow LPS	Velocity m/s	Unit Headloss m/km
Pipe 1	49.9995204977008	200	130	51.425	1.637	13.514
Pipe 2	50	200	130	22.222	0.707	2.857
Pipe 3	50	200	130	19.361	0.616	2.214
Pipe 4	50	200	130	19.578	0.623	2.260
Pipe 5	50	200	130	2.411	0.077	0.047
Pipe 6	50	200	130	-13.139	0.418	1.080
Pipe 7	50	200	130	9.941	0.316	0.644
Pipe 8	50	200	130	13.189	0.420	1.087
Pipe 9	50	200	130	9.112	0.290	0.548
Pipe 10	50	200	130	-1.612	0.051	0.022
Pipe 11	50	200	130	3.087	0.098	0.074
Pipe 12	50	200	130	1.275	0.041	0.014
Pipe 14	50	200	130	1.525	0.049	0.020
Pipe 15	50	200	130	3.925	0.125	0.115
Pipe 16	50	200	130	2.218	0.071	0.040
Pipe 17	50	200	130	1.775	0.056	0.027
Pipe 18	50	200	130	1.657	0.053	0.023
Pipe 19	50	200	130	0.018	0.001	0.000
Pipe 20	50	200	130	1.382	0.044	0.017
Pipe 21	50	200	130	1.275	0.041	0.014
Pipe 22	50.0002276094819	200	130	61.425	1.955	18.780
Valve 13	#N/A	200	#N/A	5.900	0.188	0.001

EPA Net

Node for Peak Flow

Node No	Flow (LPS)	Ground Level (m)	HGL (m)	Highest Supply Level (m)	Residual Pressure (m)
1	-9.625	31.257	48.385	31.257	17.129
2	-0.450	30.294	48.242	30.294	17.948
3	-32.500	29.248	48.132	29.248	18.884
4	-0.525	31.963	48.272	31.963	16.309
5	-0.775	31.135	48.240	31.135	17.105
6	-0.050	29.422	48.186	29.422	18.764
7	-0.125	32.463	48.245	32.463	15.782
8	-0.200	31.397	48.241	31.397	16.844
9	-1.275	29.898	48.240	29.898	18.342
10	-0.450	32.631	48.244	32.631	15.613
11	-1.525	31.525	48.243	31.525	16.718
12	-0.050	32.802	48.238	32.802	15.437
13	-0.425	31.723	48.236	31.723	16.514
14	-1.775	30.420	48.235	30.420	17.815
15	-0.275	33.865	48.237	33.865	14.372
16	-0.125	32.233	48.236	32.233	16.003
17	-1.275	30.753	48.236	30.753	17.482
18	-10.000	30.920	49.061	30.920	18.141
19 R	61.425	30.106	50.000	-	-

Network Table - Nodes

Node ID	Elevation m	Base Demand LPS	Demand LPS	Head m	Pressure m
Junc 1	31.2565503561041	9.625	9.625	48.385	17.129
Junc 2	30.2939872852472	0.45	0.450	48.242	17.948
Junc 3	29.2481763622978	32.5	32.500	48.132	18.884
Junc 4	31.9628678007966	0.525	0.525	48.272	16.309
Junc 5	31.1348399238932	0.775	0.775	48.240	17.105
Junc 6	29.4220740698302	0.05	0.050	48.186	18.764
Junc 7	32.4626864805412	0.125	0.125	48.245	15.782
Junc 8	31.3973708913645	0.2	0.200	48.241	16.844
Junc 9	29.8983522759815	1.275	1.275	48.240	18.342
Junc 10	32.6310556284916	0.45	0.450	48.244	15.613
Junc 11	31.5248317883228	1.525	1.525	48.243	16.718
Junc 12	32.8016064057686	0.05	0.050	48.238	15.437
Junc 13	31.7227160903127	0.425	0.425	48.236	16.514
Junc 14	30.4202986558342	1.775	1.775	48.235	17.815
Junc 15	33.8652390771354	0.275	0.275	48.237	14.372
Junc 16	32.2329480327147	0.125	0.125	48.236	16.003
Junc 17	30.7531970355099	1.275	1.275	48.236	17.482
Junc 18	30.919709817864	10	10.000	49.061	18.141
Resvr 19	50	#N/A	-61.425	50.000	0.000

EPA Net

Fire Flow

Pipe for Fire Flow

Pipe No	Length (m)	Inner Diameter (mm)	HWC	Flow (LPS	Velocity (MPS)	Head Loss (m/km)
1	50.000	200.000	130.000	65.970	2.100HI	21.435HI
2	50.000	200.000	130.000	29.181	0.929	4.732
3	50.000	200.000	130.000	14.399	0.458	1.279
4	50.000	200.000	130.000	32.939	1.048	5.922
5	50.000	200.000	130.000	14.602	0.465	1.313
6	50.000	200.000	130.000	1.399	0.045LO	0.017
7	50.000	200.000	130.000	4.057	0.129LO	0.122
8	50.000	200.000	130.000	1.379	0.044LO	0.017
9	50.000	200.000	130.000	28.673	0.913	4.581
10	50.000	200.000	130.000	19.727	0.628	2.292
11	50.000	200.000	130.000	19.137	0.609	2.166
12	50.000	200.000	130.000	0.510	0.016LO	0.003
13 TCV	-	200.000	-	25.060	-	-
14	50.000	200.000	130.000	0.610	0.019LO	0.004
15	50.000	200.000	130.000	24.270	0.773	3.364
16	50.000	200.000	130.000	0.887	0.028LO	0.007
17	50.000	200.000	130.000	0.710	0.023LO	0.005
18	50.000	200.000	130.000	0.663	0.021LO	0.004
19	50.000	200.000	130.000	0.007	0.000LO	0.000
20	50.000	200.000	130.000	0.553	0.018LO	0.003
21	50.000	200.000	130.000	0.510	0.016LO	0.003
22	50.000	200.000	130.000	69.970	2.227HI	23.904HI

Network Table - Links

Link ID	Length m	Diameter mm	Roughness	Flow LPS	Velocity m/s	Unit Headloss m/km
Pipe 1	49.9995204977008	200	130	65.970	2.100	21.435
Pipe 2	50	200	130	29.181	0.929	4.732
Pipe 3	50	200	130	14.399	0.458	1.279
Pipe 4	50	200	130	32.939	1.048	5.922
Pipe 5	50	200	130	14.602	0.465	1.313
Pipe 6	50	200	130	1.399	0.045	0.017
Pipe 7	50	200	130	4.057	0.129	0.122
Pipe 8	50	200	130	-1.379	0.044	0.017
Pipe 9	50	200	130	28.673	0.913	4.581
Pipe 10	50	200	130	19.727	0.628	2.292
Pipe 11	50	200	130	-19.137	0.609	2.166
Pipe 12	50	200	130	0.510	0.016	0.003
Pipe 14	50	200	130	0.610	0.019	0.004
Pipe 15	50	200	130	24.270	0.773	3.364
Pipe 16	50	200	130	0.887	0.028	0.007
Pipe 17	50	200	130	0.710	0.023	0.005
Pipe 18	50	200	130	0.663	0.021	0.004
Pipe 19	50	200	130	0.007	0.000	0.000
Pipe 20	50	200	130	0.553	0.018	0.003
Pipe 21	50	200	130	0.510	0.016	0.003
Pipe 22	50.0002276094819	200	130	69.970	2.227	23.904
Valve 13	#N/A	200	#N/A	25.060	0.798	0.015

EPA Net

Node for Fire Flow

Node No	Flow (LPS)	Ground Level (m)	HGL (m)	Highest Supply Level (m)	Residual Pressure (m)
1	-3.850	31.257	47.733	31.257	16.477
2	-0.180	30.294	47.496	30.294	17.202
3	-13.000	29.248	47.433	29.248	18.184
4	-0.210	31.963	47.437	31.963	15.474
5	-0.310	31.135	47.431	31.135	16.296
6	-0.020	29.422	47.432	29.422	18.010
7	-22.750	32.463	47.208	32.463	14.745
8	-0.080	31.397	47.316	31.397	15.919
9	-0.510	29.898	47.316	29.898	17.418
10	-0.180	32.631	47.193	32.631	14.562
11	-0.610	31.525	47.193	31.525	15.668
12	-22.720	32.802	47.024	32.802	14.223
13	-0.170	31.723	47.024	31.723	15.301
14	-0.710	30.420	47.024	30.420	16.604
15	-0.110	33.865	47.024	33.865	13.159
16	-0.050	32.233	47.024	32.233	14.791
17	-0.510	30.753	47.024	30.753	16.271
18	-4.000	30.920	48.805	30.920	17.885
19 R	69.970	30.106	50.000	-	-

MiTS: Water Reticulation

Network Table - Nodes

Node ID	Elevation m	Base Demand LPS	Demand LPS	Head m	Pressure m
Junc 1	31.2565503561041	3.85	3.850	47.733	16.477
Junc 2	30.2939872852472	0.18	0.180	47.496	17.202
Junc 3	29.2481763622978	13	13.000	47.433	18.184
Junc 4	31.9628678007966	0.21	0.210	47.437	15.474
Junc 5	31.1348399238932	0.31	0.310	47.431	16.296
Junc 6	29.4220740698302	0.02	0.020	47.432	18.010
Junc 7	32.4626864805412	22.75	22.750	47.208	14.745
Junc 8	31.3973708913645	0.08	0.080	47.316	15.919
Junc 9	29.8983522759815	0.51	0.510	47.316	17.418
Junc 10	32.6310556284916	0.18	0.180	47.193	14.562
Junc 11	31.5248317883228	0.61	0.610	47.193	15.668
Junc 12	32.8016064057686	22.72	22.720	47.024	14.223
Junc 13	31.7227160903127	0.17	0.170	47.024	15.301
Junc 14	30.4202986558342	0.71	0.710	47.024	16.604
Junc 15	33.8652390771354	0.11	0.110	47.024	13.159
Junc 16	32.2329480327147	0.05	0.050	47.024	14.791
Junc 17	30.7531970355099	0.51	0.510	47.024	16.271
Junc 18	30.919709817864	4	4.000	48.805	17.885
Resvr 19	50	#N/A	-69.970	50.000	0.000

EPA Net

Formula: Darcy-Weisbach

Average Flow

Pipe for Average Flow

Pipe No	Length (m)	Inner Diameter (mm)	DWC	Flow (LPS	Velocity (MPS)	Head Loss (m/km)
1	50.000	200.000	0.850	41.140	1.310	12.884HI
2	50.000	200.000	0.850	17.660	0.562	2.424HI
3	50.000	200.000	0.850	15.354	0.489	1.842
4	50.000	200.000	0.850	15.780	0.502	1.943
5	50.000	200.000	0.850	1.946	0.062LO	0.035
6	50.000	200.000	0.850	10.646	0.339	0.900
7	50.000	200.000	0.850	7.998	0.255LO	0.516
8	50.000	200.000	0.850	10.686	0.340	0.907
9	50.000	200.000	0.850	7.362	0.234LO	0.440
10	50.000	200.000	0.850	1.362	0.043LO	0.018
11	50.000	200.000	0.850	2.542	0.081LO	0.058
12	50.000	200.000	0.850	1.020	0.032LO	0.011
13 TCV	-	200.000	-	4.720	-	-
14	50.000	200.000	0.850	1.220	0.039LO	0.015
15	50.000	200.000	0.850	3.140	0.100LO	0.086
16	50.000	200.000	0.850	1.778	0.057LO	0.030
17	50.000	200.000	0.850	1.420	0.045LO	0.020
18	50.000	200.000	0.850	1.322	0.042LO	0.017
19	50.000	200.000	0.850	0.018	0.001LO	0.000
20	50.000	200.000	0.850	1.102	0.035LO	0.013
21	50.000	200.000	0.850	1.020	0.032LO	0.011
22	50.000	200.000	0.850	49.140	1.564	18.330HI

Network Table - Links

Link ID	Length m	Diameter mm	Roughness mm	Flow LPS	Velocity m/s	Unit Headloss m/km
Pipe 1	49.9995204977008	200	0.85	41.140	1.310	12.884
Pipe 2	50	200	0.85	17.660	0.562	2.424
Pipe 3	50	200	0.85	15.354	0.489	1.842
Pipe 4	50	200	0.85	15.780	0.502	1.944
Pipe 5	50	200	0.85	1.946	0.062	0.035
Pipe 6	50	200	0.85	-10.646	0.339	0.900
Pipe 7	50	200	0.85	7.998	0.255	0.516
Pipe 8	50	200	0.85	10.686	0.340	0.907
Pipe 9	50	200	0.85	7.362	0.234	0.440
Pipe 10	50	200	0.85	-1.362	0.043	0.018
Pipe 11	50	200	0.85	2.542	0.081	0.058
Pipe 12	50	200	0.85	1.020	0.032	0.011
Pipe 14	50	200	0.85	1.220	0.039	0.015
Pipe 15	50	200	0.85	3.140	0.100	0.087
Pipe 16	50	200	0.85	1.778	0.057	0.030
Pipe 17	50	200	0.85	1.420	0.045	0.020
Pipe 18	50	200	0.85	1.322	0.042	0.017
Pipe 19	50	200	0.85	0.018	0.001	0.000
Pipe 20	50	200	0.85	1.102	0.035	0.013
Pipe 21	50	200	0.85	1.020	0.032	0.011
Pipe 22	50.0002276094819	200	0.85	49.140	1.564	18.330
Valve 13	#N/A	200	#N/A	4.720	0.150	0.001

EPA Net

Node for Average Flow

Node No	Flow (LPS)	Ground Level (m)	HGL (m)	Highest Supply Level (m)	Residual Pressure (m)
1	-7.700	31.257	48.439	31.257	17.183
2	-0.360	30.294	48.318	30.294	18.024
3	-26.000	29.248	48.226	29.248	18.978
4	-0.420	31.963	48.342	31.963	16.379
5	-0.620	31.135	48.316	31.135	17.181
6	-0.040	29.422	48.271	29.422	18.849
7	-0.100	32.463	48.320	32.463	15.857
8	-0.160	31.397	48.317	31.397	16.920
9	-1.020	29.898	48.317	29.898	18.418
10	-0.360	32.631	48.320	32.631	15.689
11	-1.220	31.525	48.319	31.525	16.794
12	-0.040	32.802	48.315	32.802	15.514
13	-0.340	31.723	48.314	31.723	16.591
14	-1.420	30.420	48.313	30.420	17.892
15	-0.220	33.865	48.314	33.865	14.449
16	-0.100	32.233	48.314	32.233	16.081
17	-1.020	30.753	48.313	30.753	17.560
18	-8.000	30.920	49.083	30.920	18.164
19 R	49.140	30.106	50.000	-	-

Network Table - Nodes

Node ID	Elevation m	Base Demand LPS	Demand LPS	Head m	Pressure m
Junc 1	31.2565503561041	7.7	7.700	48.439	17.183
Junc 2	30.2939872852472	0.36	0.360	48.318	18.024
Junc 3	29.2481763622978	26	26.000	48.226	18.978
Junc 4	31.9628678007966	0.42	0.420	48.342	16.379
Junc 5	31.1348399238932	0.62	0.620	48.316	17.181
Junc 6	29.4220740698302	0.04	0.040	48.271	18.849
Junc 7	32.4626864805412	0.1	0.100	48.320	15.857
Junc 8	31.3973708913645	0.16	0.160	48.317	16.920
Junc 9	29.8983522759815	1.02	1.020	48.317	18.418
Junc 10	32.6310556284916	0.36	0.360	48.320	15.689
Junc 11	31.5248317883228	1.22	1.220	48.319	16.794
Junc 12	32.8016064057686	0.04	0.040	48.315	15.514
Junc 13	31.7227160903127	0.34	0.340	48.314	16.591
Junc 14	30.4202986558342	1.42	1.420	48.313	17.892
Junc 15	33.8652390771354	0.22	0.220	48.314	14.449
Junc 16	32.2329480327147	0.1	0.100	48.314	16.081
Junc 17	30.7531970355099	1.02	1.020	48.313	17.560
Junc 18	30.919709817864	8	8.000	49.083	18.164
Resvr 19	50	#N/A	-49.140	50.000	0.000

EPA Net

Peak Flow

Pipe for Peak Flow

Pipe No	Length (m)	Inner Diameter (mm)	DWC	Flow (LPS	Velocity (MPS)	Head Loss (m/km)
1	50.000	200.000	0.850	51.425	1.637	20.061HI
2	50.000	200.000	0.850	22.066	0.702	3.759HI
3	50.000	200.000	0.850	19.181	0.611	2.852HI
6	50.000	200.000	0.850	13.319	0.424	1.394
4	50.000	200.000	0.850	19.734	0.628	3.016HI
5	50.000	200.000	0.850	2.435	0.078LO	0.054
7	50.000	200.000	0.850	9.996	0.318	0.796
10	50.000	200.000	0.850	1.713	0.055LO	0.028
8	50.000	200.000	0.850	13.369	0.426	1.404
9	50.000	200.000	0.850	9.213	0.293LO	0.679
11	50.000	200.000	0.850	3.188	0.101LO	0.089
12	50.000	200.000	0.850	1.275	0.041LO	0.016
13 TCV	-	200.000	-	5.900	-	-
14	50.000	200.000	0.850	1.525	0.049LO	0.023
15	50.000	200.000	0.850	3.925	0.125LO	0.132
16	50.000	200.000	0.850	2.219	0.071LO	0.045
17	50.000	200.000	0.850	1.775	0.056LO	0.030
18	50.000	200.000	0.850	1.656	0.053LO	0.026
19	50.000	200.000	0.850	0.019	0.001LO	0.000
20	50.000	200.000	0.850	1.381	0.044LO	0.019
21	50.000	200.000	0.850	1.275	0.041LO	0.016
22	50.000	200.000	0.850	61.425	1.955	28.556HI

Network Table - Links

Link ID	Length m	Diameter mm	Roughness mm	Flow LPS	Velocity m/s	Unit Headloss m/km
Pipe 1	49.9995204977008	200	0.85	51.425	1.637	20.061
Pipe 2	50	200	0.85	22.066	0.702	3.759
Pipe 3	50	200	0.85	19.181	0.611	2.852
Pipe 4	50	200	0.85	19.734	0.628	3.016
Pipe 5	50	200	0.85	2.435	0.078	0.054
Pipe 6	50	200	0.85	-13.319	0.424	1.394
Pipe 7	50	200	0.85	9.996	0.318	0.796
Pipe 8	50	200	0.85	13.369	0.426	1.404
Pipe 9	50	200	0.85	9.213	0.293	0.679
Pipe 10	50	200	0.85	-1.713	0.055	0.028
Pipe 11	50	200	0.85	3.188	0.101	0.089
Pipe 12	50	200	0.85	1.275	0.041	0.016
Pipe 14	50	200	0.85	1.525	0.049	0.023
Pipe 15	50	200	0.85	3.925	0.125	0.132
Pipe 16	50	200	0.85	2.219	0.071	0.045
Pipe 17	50	200	0.85	1.775	0.056	0.030
Pipe 18	50	200	0.85	1.656	0.053	0.026
Pipe 19	50	200	0.85	0.019	0.001	0.000
Pipe 20	50	200	0.85	1.381	0.044	0.019
Pipe 21	50	200	0.85	1.275	0.041	0.016
Pipe 22	50.0002276094819	200	0.85	61.425	1.955	28.556
Valve 13	#N/A	200	#N/A	5.900	0.188	0.001

EPA Net

Node for Peak Flow

MiTS: Water Reticulation

EPA Net

Fire Flow

Pipe for Fire Flow

MiTS: Water Reticulation
EPA Net

Node for Fire Flow
MiTS: Water Reticulation
EPA Net

Formula: Chezy-Manning

Average Flow

Pipe for Average Flow

MiTS: Water Reticulation

EPA Net

Node for Average Flow

MiTS: Water Reticulation

EPA Net

Peak Flow

Pipe for Peak Flow

MiTS: Water Reticulation

EPA Net

Node for Peak Flow

MiTS: Water Reticulation

EPA Net

Fire Flow

Pipe for Fire Flow

MiTS: Water Reticulation

EPA Net

Node for Fire Flow

MiTS: Water Reticulation

EPA Net

Hazen-Williams vs Darcy-Weisbach vs Chezy-Manning

A slight difference between the result of headloss and residual pressure is due to the formula used in the calculation of headloss.

Average Flow

Pipe for Average Flow

Node for Average Flow

Peak Flow

	Pipe for Peak Flow

Node for Peak Flow

Fire Flow

	Pipe for Fire Flow

Node for Fire Flow

Findings

The comparison between EPA Net and MiTS shows similarity in the residual pressure of the node while the comparison of headloss in a few pipes has a difference of 0.001 m/km. The list of the pipes with this difference is shown in the table below.

HWC	Pipe No	Headloss (m/km)	
		EPA Net	MiTS
Average Flow	16	0.027	0.026
	16	0.017	0.018
Peak Flow	17	0.027	0.026

DWC			
Average Flow	4	1.944	1.943
	15	0.087	0.086
CMC			
Average Flow	4	2.313	2.314
Fire Flow	9	7.404	7.403

While the data between EPA Net and MiTS is similar, when the term of comparison is between the headloss formula (Hazen-Williams vs Darcy-Weisbach), the difference of value can be seen significantly for both node's residual pressure and pipe's headloss. This difference in value is due to the different formulas used for the calculation of the headloss;

Hazen-Williams headloss formula,

$$H\:=\frac{10.67LQ^{1.852}}{C^{1.852}d^{4.871}}$$

Darcy-Weisbach headloss formula,

$$H\:=\:\frac{fLV^2}{2dg}$$

Chezy-Manning headloss formula,

$$H\:=\frac{10.293\cdot \:n^2\cdot \:L\cdot \:Q^2}{d^{5.33}}$$

Here is a simple project file created in EPA Net 2.2 showing the different results when using different headloss formulas, **HWC vs DWC vs CMC**

Here is the **EPA Net 2.2** Installer for you to try on your own

A **Google spreadsheet** is used to compare the headloss for each formula

Conclusion

In conclusion, the results obtained from both software are similar. Though there are a few pipes with a difference of 0.001 m/km headloss, it can be said that MiTS's Water Reticulation module and EPA

Net produce a similar result.

This provides us with confidence that our Water Reticulation module’s analysis is accurate.

Related



Ngu Soon Hui

I’m the Benevolent Dictator for Life for MiTS Software cum Editor of this website. Read more here.

You can also contact me at soonhui@mes100.com